CLERICAL/TECHNICAL STUDY TECHNICAL REPORT

PSYCHOMETRIC ANALYSIS OF THE ORGANIZATIONAL ASSESSMENT ITEMS:

Work Unit Experiences and Organizational Experiences Scales

Paul D. Usala

U.S. Office of Personnel Management
Employment Service
Personnel Resources and Development Center
Theodore Roosevelt Building
1900 E Street, NW
Washington, DC 20415-0001

TABLE OF CONTENTS

EXECUTIVE SUMMARY iv

INTRODUCTION 1
Purpose 1
Analyses 2
LISREL 2
Coefficient Alpha and Item Subscaling 6
Interrater Agreement 6

METHOD 8
Subjects 8
Instrument 8
Data Preparation 11
Outliers/ Response Variance 11
Random Subsamples 11
Analyses 12
Item Validity/LISREL Analyses 12
Observed Score Subscale Reliability Analyses 13
Interrater Agreement Analyses 14

RESULTS 15
Item Validity/LISREL Analyses 15
Initial Confirmatory Factor Analysis and Model Shaping 15
Model Cross-Validation 30
Model Replication 30
Additional Items Administered to the Nonconsortium Sample 33
Multiple Groups Analyses 40
Cross-scales Analyses 44
Observed Score Subscale Reliability 47
Interrater Agreement 48

SUMMARY AND DISCUSSION 53

REFERENCES 56

APPENDIXES

A: Master List of Items 58
B: A Priori Item-to-Dimension Designations 63
C: Work Unit Experiences Scale, Consortium Employee Subsample #1
Model Shaping: Modifications in the Initial Factor Analysis 70
D: Average Interrater Agreements, Consortium Incumbents, Subsample #2 . . 74
E: Final Dimension Assignments Based on LISREL Factor Loadings
and Cronbach's Coefficient Alpha 79

LIST OF TABLES

1. Work Unit Experiences and Organizational Experiences Scales: A Priori Climate Dimension Subscales (Number of a priori items in parentheses) 9
2. Definitions of the A Priori Climate Dimensions 10
3. Factor Loadings, Initial Factor Model with Item #48 Removed Work Unit Experiences Scale, Consortium Employee Subsample #1 17
4. Factor Loadings, Final Factor Model Work Unit Experiences Scale, Consortium Employee Subsample #1 20
5. Item-to-(Non-Method)Factor Assignment Changes Between Initial and Final Factor Models, Work Unit Experiences Scale, Consortium Employee Subsample #1 22
6. Items Comprising the Two Method Factors in the Final Model Work Unit Experiences Scale, Consortium Employee Subsample #1 23
7. Correlated Residuals, Final Factor Model Work Unit Experiences Scale, Consortium Employee Subsample #1 26
8. Factor Correlations, Final Factor Model (Decimals omitted) Work Unit Experiences Scale, Consortium Employee Subsample #1 27
9. Factor Loadings, Initial Factor Model Organizational Experiences Scale, Consortium Employee Subsample #1 28
10. Factor Loadings, Final Factor Model Organizational Experiences Scale, Consortium Employee Subsample #1 31
11. Changes in Item-to-Factor Assignments Between the Initial and Final Factor Models, Organizational Experiences Scale, Consortium Employee Subsample #1 . 33
12. Correlated Residuals, Final Factor Model Organizational Experiences Scale, Consortium Employee Subsample #1 34
13. Factor Correlations, Final Factor Model (Decimals omitted) Organizational Experiences Scale, Consortium Employee Subsample #1 36
14. Factor Loadings, Final Factor Model Work Unit Experiences Scale, Nonconsortium Employee Subsample #1 37
15. Items Comprising the Employee-Oriented Method Factor in the Final Model Work Unit Experiences Scale, Nonconsortium Employee Subsample #1 39
16. Factor Correlations, Final Factor Model (Decimals omitted) Work Unit Experiences Scale, Nonconsortium Employee Subsample #1 41
17. Factor Loadings, Final Factor Model Organizational Experiences Scale, Nonconsortium Employee Subsample #1 42
18. Factor Correlations, Final Factor Model (Decimals omitted) Organizational Experiences Scale, Nonconsortium Employee Subsample #1 44
19. Results of Multiple Groups Simultaneous Factor Analyses 45
20. Cross-Scales Analysis, Factor Correlations (Decimals omitted) 47
21. Cronbach's Coefficient Alpha (α) Reliability Estimates Work Unit Experiences Scales, Consortium Incumbents and Supervisors, Subsamples #2 48
22. Cronbach's Coefficient Alpha (α) Reliability Estimates Organizational Experiences Scales, Consortium Incumbents and Supervisors, Subsamples #2 49

23. Cronbach's Coefficient Alpha (α) Reliability Estimates
Work Unit Experiences Scales, Nonconsortium Incumbents, Subsample #2 51
24. Cronbach's Coefficient Alpha (α) Reliability Estimates
Organizational Experiences Scales, Nonconsortium Incumbents, Subsample #2 . . 52

LIST OF FIGURES

1. Initial Factor Model, Work Unit Experiences Scale, Consortium Employees . . . 16
2. Final Factor Model, Work Unit Experiences Scale, Consortium Employees 19
3. Cross-scales Analysis, Factor Correlations of Common Factors Across
Work Unit and Organizational Experiences Scales and of Other Factors
with Large Correlations 46

EXECUTIVE SUMMARY

This study was a psychometric analysis of 163 organizational climate items that were part of a large survey of over 70,000 employees in 77 clerical and technical Federal occupations and their supervisors (Rodriguez, Usala, & Shoun, 1995). The items were written to measure 18 climate dimensions related to organizational effectiveness: Training and Career Development, Reward and Recognition, Innovation and Risk-Taking, Customer Focus, Leadership and Commitment to Quality, Institutional Fairness, Open Communication, Employee Involvement, Health-Enhancing Work Environment, Family/Work/Life Balance, Teamwork, Job Security and Commitment to Workforce, Resources Allocation/Utilization, Supervision/Management, Diversity, Social Responsibility, Strategic Planning, and Measurement and Analysis. Some of these dimensions were assessed at the organizational level, some at the work unit level, and some at both. The purpose of this analysis was threefold: (1) to determine if each item was a valid indicator of the climate dimension it was intended to measure, (2) to identify items whose responses could be summed to form reliable climate dimension scales, and (3) to evaluate the extent to which responses to each item reflected a "shared perception" among the respondents. The analysis used LISREL (a structural equation modeling/confirmatory factor analysis software), Cronbach's Coefficient Alpha internal consistency reliability estimate, and interrater agreement calculations to address each of these goals, respectively.

The LISREL analyses found that only nine of the 163 items were not valid indicators for any of the 18 dimensions. All 18 of the dimensions had valid representation from the remaining items, although one dimension specified a priori at both levels lost its representation at the work unit level. These analyses also determined seven items to be more valid indicators of dimensions other than the ones for which they were originally written. LISREL analyses of modified measurement models using employee data were successfully cross-validated in holdout samples and replicated in the supervisor sample. Multiple groups analyses using LISREL found the item validities to be consistent between young and old respondents; however, statistically significant differences between whites and African Americans were discovered, suggesting that there may be differences in what some items mean for the two races. Differences were also found between males and females at the organizational level, but not the work unit level. Reverse-scored items were a source of stress in some of the measurement models, having implications for future item writing. Subsequent coefficient alpha analyses were used to make final dimension assignments based on reliability for items whose assignments the LISREL analyses could not definitively determine. Finally, the interrater agreement analysis identified 13 items with averaged within-agency interrater agreement to be extremely low, suggesting that, in this sample, responses to these items do not reflect a shared perception among respondents.

INTRODUCTION

Purpose

The purpose of this study was to evaluate the psychometric integrity of the organizational assessment items in the survey of clerical/technical employees (distributed in November, 1993 through January, 1994; Rodriguez, Usala, & Shoun, 1995). The three general goals of this item analysis were:

1. Assess the "true score" validity of the items (i.e., did the items measure what they were intended to measure);

2. Identify items whose responses can be summed to form reliable dimension subscales;

3. Identify items whose responses can be sensibly interpreted as reflecting an attribute of an organization (i.e., items whose responses reflect a shared perception among the respondents).

The specific goals undertaken to meet these general ones were as follows:

a. Assess the validity of the predicted (a priori) assignments of items to the factors (dimensions) that they were purported to measure;

b. Determine which items, if any, should be reassigned to factors (i.e., determine which items are more valid indicators of survey dimensions other than the dimensions for which they were originally written);

c. Finalize the "true score" item-to-factor structure that would serve as a basis for "observed score" dimension scoring;

d. Identify items that are not valid indicators of the dimensions in this study and whose responses should therefore not be reported in a dimensional context;

e. Finalize the observed score item-to-dimension assignments;

f. Assess interrater agreement at the item level. (Low agreement indicates that the organizational attribute measured by an item is not a shared perception among the respondents. In such instances, it is not sensible to report mean responses as representing an "organizational" attribute.)

Analyses

Three different sets of analyses were the primary means of achieving the goals stated above. These were:

1. Structural Equation Modeling using LISREL (LInear Structural RELations) software (Jöreskog & Sörbom, 1993);

2. Cronbach's Coefficient Alpha reliability estimate;

3. Interrater agreement calculations devised by Finn (1970) and modified by Usala (1993).

The following is an explanation of why and how each set of analyses was used.

LISREL

LISREL is a statistical software for performing structural equation modeling. This means simply that it allows a researcher to make hypotheses regarding relations (covariances and regressions) among variables and to test whether these hypotheses are tenable. It does so by comparing actual (observed) data covariance relationships among indicators (variables) to the covariance relationships implied by a researcher's model. The more similar these two covariance matrices are to each other, the better the "fit" of the model to the data, and the more confident the researcher is that his/her model accurately reflects relationships as they truly exist.

While there are many other kinds of analyses that can be used to specify and test hypothesized relationships, the greatest value of LISREL and other structural equation modeling procedures is that they disattenuate for measurement error, both stochastic (random) measurement error (which suppresses relationships) and systematic (correlated) measurement error (which can artifactually suppress or inflate relationships). This means that "true score" relationships among variables can be evaluated, i.e., the covariance between portions of response variances not attributed to measurement error can be estimated. However, while important for determining what it is that items are really measuring, an evaluation of such "true" relationships alone is sufficient only in a totally research context. If item or scale "observed score" responses are to be reported in some assessment context, then observed score analyses such as coefficient alpha and, in the case of climate assessments, interrater agreement must follow to ensure that the actual quantitative values that serve as the basis for decisions are reliable and (for climate) a shared perception.

The relationships specified in the present item analysis were in the context of confirmatory factor analytic models. (Confirmatory factor analysis is a form of structural equation modeling.) In such a context, an item's true score relationship to a factor that represents a particular construct (dimension) can be evaluated. LISREL is a very powerful tool for performing such analyses (e.g., Usala & Hertzog, 1989). Factor analysis in general, confirmatory factor analysis in particular, and LISREL as a special case, each have

advantages over more traditional approaches to item analysis. The present study capitalized on several of these advantages. The following are the most important issues that were relevant to how the present study was conducted.

Factor Analysis versus Internal Consistency. When an a priori item-to-dimension structure is specified (i.e., when some items in a survey are thought to measure one dimension, while other items measure a different dimension), a traditional way of estimating the reliability of the dimension subscales[1] (and each item's contribution to the reliability) is via an internal consistency analysis such as Cronbach's Coefficient Alpha (α). Unfortunately, a coefficient α analysis has often been used as a proxy for an item validity analysis. This problem is related to the adoption of the homogeneity approach to subscale definition. This approach, which underlies both factor analysis and internal consistency analyses, states that items which are valid indicators of the same construct should correlate highly, comprising a "homogenous" grouping of items. However, internal consistency results are not as sensitive to homogeneous item subgroupings as factor analysis. In other words, internal consistency analyses can show a subscale to be reliably composed of a group of items which actually comprise two or more distinct homogenous groupings. These groupings may in fact represent distinct but correlated constructs. These constructs, if not too highly correlated, may have useful, differential validities with other variables. Factor analysis is more sensitive to such fine inter-item correlations and affords a better opportunity to discover more homogeneous subgrouping (Green, Lissitz, & Mulaik, 1977).

Confirmatory Factor Analysis versus Exploratory Factor Analysis. Even when an item-dimension structure is specified in advance of the analyses, it is still common practice to perform exploratory factor analysis on survey data and then make some judgement as to how well the results match the a priori structure. While perfectly acceptable, a confirmatory factor analysis approach offers the advantage that a hypothesis (e.g., a specific item-factor structure) is being statistically tested, reducing the probability that a researcher is capitalizing on chance. In other words, in exploratory analysis, all items load onto all factors, while in confirmatory analysis, the researcher dictates which item load onto which factors based on a theoretical framework, and this hypothetical structure is tested statistically. Further, exploratory factor analysis is plagued by the "indeterminacy" problem: solutions are dependent upon such things as type and power of rotation which can be manipulated until the most desirable solutions are achieved. In general, the only things to manipulate in confirmatory factor analysis are the estimation method (although maximum likelihood is probably the most common in use) and the researcher's model; when these two parameters are set, confirmatory analysis can generate only one solution (Mulaik, 1975).

Using LISREL to Perform Confirmatory Factor Analysis. The following capabilities of LISREL were important for the present study.

Goodness-of-fit indices. LISREL generates a χ^2 statistic which reflects how well a factor model fits observed data. In theory, a significant χ^2 means that the model does not fit

---

[1]In this paper, "subscale" refers to the observed score manifestation of a dimension, while "factor" refers to the true score representation.

the data well. However, χ^2 is very sensitive to the large sample sizes required to run LISREL with confidence, and so, in practice, a significant χ^2 is often an artifact of sample size and not truly due to a poor fitting model. For this reason, LISREL also generates a goodness-of-fit index (GFI) and adjusted goodness-of-fit index (AGFI; adjusted for degrees of freedom) that measure model fit on a 0 to 1 scale. The most recent version of LISREL also generates several other fit indices that have been suggested by researchers in recent years.

Modeling error variance. As stated earlier, the most important aspect of LISREL as it is applied to social science research is its ability to disattenuate for measurement error. A review of LISREL model notation will help clarify how LISREL corrects relationships among variables for measurement error. Below is a simple, two-factor LISREL path diagram of a factor analytic model. The two large circles denoted by the Greek Eta (ξ) represent the factors, which in turn represent latent constructs. The curved line between them with double arrowheads represents their covariance, while the curved single-arrow lines above them represent their variances; factor variances and covariances are denoted by Phi (Φ). The boxes beneath the factors represent the factor indicators (items or subscales). The arrows between the factors and indicators, denoted by lambda (λ), are the factor loadings, or the "true score" relationships between the indicators and the constructs they are intended to measure. They point from the factors to the indicators to illustrate that the latent constructs are the source of the observed responses on the indicators. The factor loadings are regression coefficients, and the strength of a factor loading is an indication of an item's (or subscale's) validity for measuring a particular construct.

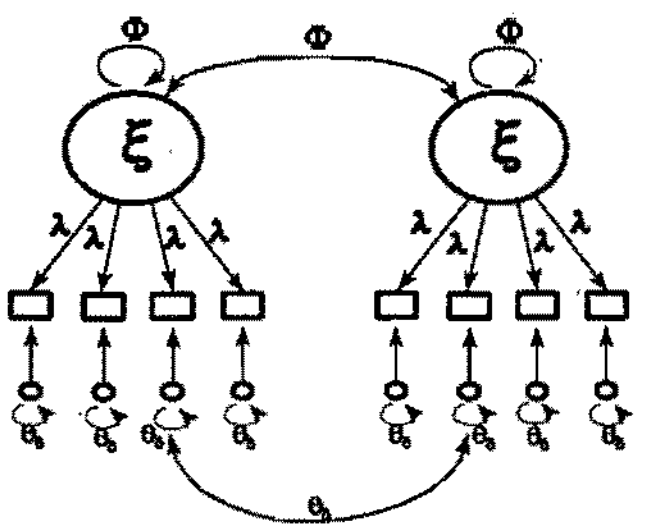

Below the indicators are the other source (besides the latent constructs) of the observed responses: measurement error, or "disturbances," represented by the small circles with arrows pointed toward the boxes. Theta (θ) denotes the variances and covariances on these disturbance terms. LISREL uses a common factor model to partition error and true variance in item responses. In other words, it is the relationship among items -- their common variance -- that determines what is error variance or true variance. (A crucial point should be obvious here: The particular items included in a model are of critical importance in

defining error and true variance and covariance.) With error variance removed from the indicator response variance (and thus removed from the "factor space"), the regression (λ) of the indicator onto the factor is its "true score" relationship to the factor. If the indicators are items from a single scale, the factor is a "true score factor" representing a latent construct; if the indicators are subscales of the same dimension from different instruments, the factor is a "latent variable" representing a latent construct. The ability of LISREL to model error covariance (the double-headed curved arrow between two indicators in the figure) is extremely important. This represents systematic error which, if not expressed in the model, can force itself to covary via the factor correlation (artifactually inflating it) and contaminate the factors themselves, compromising the factor loadings of the other items. (Correlated measurement error is particularly important to account for in longitudinal studies where because the same indicators are used over time, responses have a built-in systematic error variance.) The present study found excellent examples of correlated error among items, discussed in the Results section.

Model shaping and modification indices. Some researchers stipulate that confirmatory factor analysis (CFA) is simply that -- confirmatory -- and that using CFA procedures to adjust models (called "model shaping") is an inappropriate application. This is simply not true. CFA can be used to perform "exploratory" work (e.g., determining that an item originally loaded on a particular factor is best loaded on another), provided that the researcher understands that chance relationships may be driving modifications suggested by LISREL solutions. There are two things to which researchers should always be adhere to guard against modifications based on chance: (1) make modifications that are only theoretically sensible, and (2) cross-validate the final model in a holdout sample. A third point -- replicating the solution for the final model in an unused sample of different characteristics -- is also desirable.

LISREL makes model shaping convenient. A LISREL solution can include "modification indices," which reflect the amount of stress in a model due to unspecified relationships. For example, a large modification for a factor loading or an error covariance that is not specified in the model indicates that "freeing" the parameter (i.e., allowing the indicator to load on that factor, or allowing the error variance between two indicators to covary) would significantly improve the fit of the model to the data. The improvement in model fit can be assessed by evaluating the goodness-of-fit index or the change in χ^2. Cross-validation of the final model and replication of the final solution can likewise be evaluated in similar ways.

Measurement equivalence and multiple groups analysis. One analysis that, regrettably, is usually not performed is a test of whether a factor structure holds for particular demographic subgroups. Such analysis is known as assessing the "measurement equivalence" of an instrument, and it asks the question: do the items mean the same thing for persons of different groups? For instance, suppose an item on an Anxiety subscale of a personality inventory asks if a person shakes a lot. Might not that item be an indicator of anxiety in young persons, but not in an old population where shaking is a common somatic complaint related to physical age? Ensuring that responses on an instrument are valid indicators for sex, age, and racial subgroups is particularly important when item or scale responses are used for individual counseling or selection purposes.

LISREL has the capability to test the measurement equivalence of a factor structure in multiple groups by performing "simultaneous" factor analysis. A factor structure can be tested in two (or more) separate samples at once, and LISREL generates a single χ^2 statistic reflecting the model fit to both. The model is then tested again, but this time parameters can be constrained to be equal across the groups. The resultant χ^2 can be compared to the previous one to test the hypothesis the parameters that were constrained are really equal in the two groups. This is called "nested" modeling. (The same principal can be applied within groups to test parallelism between alternative scales.) Sequential, nested modeling can be performed to test the measurement equivalence of all the model parameters; however the present study tested only the equivalence of the item-to-factor true score relationships (i.e., the factor loading matrix), known as testing "tau(τ)-equivalence," across sex, age, and racial subgroups.

Coefficient Alpha and Item Subscaling

While LISREL is an excellent tool for determining what construct an item's true score variance is measuring (i.e., assessing item validity), the factor structure determined by a LISREL analysis should only be used as a guide for constructing observed score subscales (e.g., items whose observed scores are summed to generate scale or subscale scores). Ultimately, observed scores are typically used for making judgments about people, organizations, etc. These observed scores are not disattenuated for measurement error. A reliability estimate such as coefficient alpha for prospective subscales is necessary to ensure that observed score subscales are reliable and to identify items that diminish a scale's reliability.

Interrater Agreement

Climate analysis presents an interesting paradox in quantitative analysis. The above analyses require variance in item responses to evaluate item validity and scale reliability. However, whether an item is a valid indicator of a climate construct is a different question from whether that item's responses reflect a climate for an organization. A climate is a shared perception that an organization (or other level of analysis) has a particular characteristic associated with a construct. In other words, there has to be agreement – the opposite of variance – within a level of analysis on an observed score to assert that the associated climate exists. An item (or scale) can be a valid indicator of a climate construct, and yet when applied to a particular organization, be responded to with a large variance showing that there is no coherent climate in that context. (An interesting implication of this paradox is that, when possible, item validity should be evaluated using a mix of organizational units to increase response variance that might be lacking within organizational units.)

While interrater agreement from this perspective is strictly a description of a specific organizational unit and not the psychometric quality of the item or scale, an assessment of interrater agreement across many organizational contexts should provide information as to the usefulness of a climate indicator. In the present study, an average of within-agency interrater agreements (with a minimum number of respondents in an agency as a criterion for inclusion) was calculated for each item. (Although the items were asked at the work unit and organization level, the agency was the lowest unit of analysis that could be identified in the

dataset.) Items with very low average interrater agreement were identified as ones that may not be useful as climate indicators in general, and for the present sample, should not be reported because they typically are not measuring a shared perception of an organization.

The measure of interrater agreement used in the present study was one suggested by Finn (1970) and revisited by James, Demaree, and Wolf (1984). Although originally presented as a reliability index for a single item in a single-occasion context, Kozlowski (1992) responded to criticism of this perspective (by Schmidt and Hunter, 1989) by suggesting that the measure is better thought of as an index of consensus, particularly useful in climate applications. The measure compares the response variance on an item to the variance of the uniform (even) distribution of responses across all the response categories. The uniform distribution would be expected if a large sample responded randomly to the item, i.e, if responses were due totally to random error. The equation, based on James et al.'s (1984) paper, is:

$$C = 1 - \frac{s_x^2}{\sigma_{EU}^2},$$

where C is the consensus index, s_x^2 is the variance of the observed responses, and σ_{EU}^2 is the uniform distribution variance ("E" for expected error, "U" for uniform). The index is, in theory, on a scale of 0 to 1. If the observed scores represent perfect consensus, then $s_x^2=0$ and $C=1.0$. If the observed scores represent random responding, then $s_x^2 = \sigma_{EU}^2$ and $C=0$. In practice, because of how a sample variance (s_x^2) is calculated, s_x^2 for a uniform distribution only equals σ_{EU}^2 when samples are large. For this reason, Usala (1993) suggested using the population variance σ_x^2 in place of s_x^2 (σ_x^2 for random responding = σ_{EU}^2), which serves to calibrate C to 0 when responses are uniformly distributed, regardless of sample size. Usala also substituted the notation σ_U^2 for σ_{EU}^2 under the realization that the distribution of random (error) responding is not uniform under all conditions, but that it is specifically the variance of the uniform distribution that is required for this calculation. The new equation is:

$$C' = 1 - \frac{\sigma_x^2}{\sigma_U^2}.$$

The variance of the uniform distribution is calculated as follows:

$$\sigma_U^2 = \frac{A^2-1}{12},$$

where A = the number of response categories for the item.

METHOD

Subjects

The subjects of this study were Federal employees in 77 clerical and technical occupations, grade levels 3 through 9, and their supervisors. Ten Federal agencies comprised a consortium that helped fund the project. Subjects were randomly sampled via a stratification plan that ensured adequate representation within each occupation and grade level for each consortium agency and the Federal government as a whole. This resulted in a mail-out sample of over 70,000 employees (35,000 from the consortium and 35,000 from the non-consortium agencies) and over 35,000 supervisors (only the consortium supervisors were given the climate section of the survey). The response rate for the entire project was 42%. Because the present analyses were not concerned with occupation-specific data, the sample size was more than adequate to conduct this study. Also, not all items were administered to every subject (see below) such that the three groups of subjects – consortium employees, non-consortium employees, and consortium supervisors – were in fact three separate samples requiring their own analyses. Considerable item overlap, however, did allow comparisons among the samples.

Instrument

The climate survey was designed to collect information regarding organizational attributes that are related to organizational effectiveness. It was administered as one section of a larger occupational analysis survey of clerical/technical occupations (Rodriguez, Usala, & Shoun, 1995). There were actually three different climate surveys: one for consortium employees, one for consortium supervisors, and one for non-consortium employees. There were also four subsections of the climate section: a Work Unit Experiences scale, an Organizational Experiences scale, a Personal Experiences scale, and a Job Satisfaction scale. The latter two scales were short and deemed inappropriate to analyze using the procedures outlined in this study. Therefore, the current analysis was performed only on the items in the Work Unit Experiences and Organizational Experiences scales, which included the vast majority of the climate items.

The climate section was written by Dr. Jodi Schneider of the U.S. Office of Personnel Management.[2] Items were developed or taken from the organizational climate scientific literature and well-established sources such as the OPM Leadership Effectiveness Survey (Career Entry Group, Office of Personnel Research and Development, 1993), the Presidential Award for Quality (Federal Quality Institute, 1993), the Malcolm Baldrige National Quality Award, and Healthy Companies Pathways (Healthy Companies, 1992). Appendix A is a master item list showing all the items in the Work Unit Experiences and the Organizational Experiences scales. The climate items were written to measure particular climate

---

[2]This part of the survey was a precursor to the OPM Organizational Assessment Survey. The technical report (Schneider, 1993) for that survey provides a more elaborate description of the research foundation for this portion of the survey.

dimensions, or subscales. Table 1 lists the a priori climate dimensions and the number of items written to measure each. There were 13 a priori subscales and one single-item dimension in the Work Unit Experiences scale, and 16 a priori subscales in the Organizational Experiences scale.

Table 1
Work Unit Experiences and Organizational Experiences Scales: A Priori Climate Dimension Subscales (Number of a priori items in parentheses)

Work Unit Experiences	*Organizational Experiences*
Training and Career Development (7)	Training and Career Development (3)
Reward and Recognition (3)	Reward and Recognition (4)
Innovation and Risk-Taking (7)	Innovation and Risk-Taking (6)
Customer Focus (5)	Customer Focus (5)
Leadership and Commitment to Quality (1)	Leadership and Commitment to Quality (6)
Institutional Fairness (9)	Institutional Fairness (4)
Open Communication (5)	Open Communication (5)
Employee Involvement (9)	Employee Involvement (2)
Health-Enhancing Work Environment (3)	Health-Enhancing Work Environment (5)
Family/Work/Life Balance (5)	Family/Work/Life Balance (3)
Teamwork (3)	Teamwork (3)
Job Security and Commitment to Workforce (1)	Job Security and Commitment to Workforce (8)
Resource Allocation/Utilization (9)	Diversity (14)
Supervision/Management (8)	Social Responsibility (8)
	Strategic Planning (4)
	Measurement and Analysis (8)

Table 2 shows the definitions for each dimension written by Dr. Schneider.[3] Appendix B lists the items grouped by dimension with codes designating which items were presented to each sample. There were 75 possible Work Unit Experiences items and 88 possible Organizational Experiences items, for a total of 163. Directions for the Work Unit items instructed incumbents to respond to the items with regard to "The people with whom you work on a day-to-day basis (the group or team consisting of you, your co-workers, and immediate supervisor)," while supervisors answered in reference to "The people you supervise on a day-to-day basis (the group or team consisting of you and the employees you supervise)." For the Organizational Experiences section, all respondents answered questions in reference to "The highest level in your Agency or Department for which you feel you can give accurate answers; you may want to choose the Office or Bureau level." For the items in these two sections, respondents indicated the extent to which they agreed with each statement. The responses for both sets of items were on a 5-point scale of "Strongly Agree," "Agree," "Neither Agree nor Disagree," "Disagree," and "Strongly Disagree," with a sixth option for "Do Not Know" which was recoded to missing in the analyses.

[3]The definition for the Measurement and Analysis dimension was written by the present author based on the scale's a priori item content.

Table 2
Definitions of the A Priori Climate Dimensions

Training and Career Development

Organization provides employees with the training and guidance necessary for effective job performance; has an ongoing commitment to the training and career development of all employees; provides continuous education and learning opportunities for employees.

Reward and Recognition

Organization uses a diverse set of rewards and incentives to recognize the full contributions of employees; rewards excellence; values and recognizes employees for their involvement in quality improvements; creates a reward system that employees perceive as fair; ensures reward system reflects important organizational values (e.g., service, creativity, diversity, teamwork).

Innovation and Risk-Taking

Organization encourages and rewards innovation, creativity, and risk-taking; is responsive to change; adopts new technologies that enhance human capabilities and satisfaction, and yield competitive advantages; continually updates work processes, materials, and equipment.

Customer Focus

Organization has a strong customer-service focus; demonstrates commitment to providing customers with high-quality, ethically sound products and services; employees know and respond to the needs of their customers.

Leadership and Commitment to Quality

Management promotes high performance and quality throughout the organization; makes it clear to employees through their words, actions, and choices that high performance and quality are important; inspires commitment to high performance and quality from all employees; creates and sustains organizational vision, goals and values that are related to continuous improvement in performance and quality.

Institutional Fairness

Organization protects the rights of all employees to a fair and respectful work relationship; protects individual rights to privacy and dissent; provides a fair system to resolve disputes; is concerned with the well-being of its employees; and treats its employees well.

Open Communication

Organization shares information with employees at all levels of the organization; promotes top-down and bottom-up information flow; employees receive sufficient and accurate information necessary for performing their jobs; employees and managers exchange information freely; different divisions; departments share information necessary to attain organizational goals.

Employee Involvement

Organization promotes employee involvement and participation throughout the organization (e.g., in improving products/services/processes, job and work design, setting organizational goals, making decisions); values the contributions and ideas of employees; solicits employee ideas and suggestions; opens decision-making processes widely within the organization; provides employees with the authority necessary to accomplish work objectives.

Health-Enhancing Work Environment

Organization provides a pleasant, healthy, and safe work environment; works to prevent physical or psychological harm in the workplace; creates physical conditions (e.g., temperature, noise, cleanliness) that are conducive to effective performance; provides work space and physical facilities that are acceptable.

Family/Work/Life Balance

Organization creates conditions that help employees balance family needs and work demands; respects and supports family relationships and outside companionships; promotes a family-friendly culture through such practices as flexible hours and home-work options, benefits programs that cover family planning, parental leave policies, and employer-organized child care.

Teamwork

Organization encourages teamwork and cooperation; fully involves teams in improving products/services/work processes and solving problems; provides team-based incentives; departments coordinate their efforts to achieve organizational goals; employees cooperate to accomplish work objectives.

Job Security and Commitment to Workforce

Organization recognizes that its effectiveness depends on the commitment and morale of its employees; provides job security; seeks to develop a long-term core workforce; looks for alternatives to layoffs whenever possible, appreciating both the organizational benefits and the fairness of keeping experienced, dedicated employees; maintains a workforce that is flexible in its work roles and in learning new skills; periodically retrains employees.

Resources Allocation/Utilization

Organization provides resources (e.g., personnel, supplies, equipment) necessary for effective job performance; makes appropriate materials and supplies available; maintains and operates equipment at peak efficiency; has sufficient personnel with job-relevant competencies; keeps work delays to a minimum; employee workloads are appropriate.

Supervision/Management

Supervisors and managers communicate a clear understanding of task responsibilities, work goals, priorities and performance standards; set high goals for employees; monitor employee performance; provide constructive performance feedback to employees; provide employees with assistance and guidance necessary for effective performance; support employees; and provide necessary resources.

Diversity

Organization sees diversity as a source of stimulation and enrichment; values differences in background, perspectives, and attitudes; embraces the broaden ethnic, racial, religious, and cultural diversity in the workforce; assures equality of employment and opportunity; opens opportunities for persons with disabilities.

Social Responsibility

Organization leads and invests in public interests; promotes the social well-being of the community and nation; sponsors and supports employee involvement in community affairs (e.g., through charity work, community service, partnerships with schools); commits itself to preserve and restore environmental health; raises environmental consciousness throughout its workforce and communities.

Strategic Planning

Organization develops and implements strategies that continually adapt to the changing world; monitors and responds to its external environment; takes advantage of opportunities; has goals and objectives (including quality improvement goals) consistent with achieving its vision; integrates performance and quality improvement requirements into its overall strategic planning process; involves employees, customers, and suppliers in the planning process; uses customer requirements, supplier, and benchmark data in planning throughout the organization.

Measurement and Analysis

Organization makes provisions to collect data regarding the quality of its products and services, customer perceptions of its products and services, and the extent to which its meets its goals and objectives; analyzes such data

Data Preparation

Outliers/ Response Variance

Earlier data cleaning had discarded respondents with low response variance across the job analysis and climate sections of the survey together (Rodriguez, Usala, & Shoun, 1995). In addition, in the present study, each of the three samples -- Consortium Employees (CE), Nonconsortium Employees (NCE), and Consortium Supervisors (CS) -- was checked for respondents who had zero response variance in each of the climate subsections on their surveys (e.g., the CS subjects were checked for respondents with zero variance in each of the Work Unit Experiences, Organizational Experiences, and Job Satisfaction subsections). Those with zero response variance in all subsections were discarded from the samples. This process left samples of 14,765 (CE sample), 13,805 (NCE sample), and 10,356 (CS sample).

Random Subsamples

Because the present study would have an exploratory nature in that it would involve using a confirmatory factor analysis to perform model shaping, each sample was randomly split into three subsamples so that model cross-validations using unanalyzed samples could be conducted. This left subsamples with the following sample sizes (N) at the investigator's disposal:

Sample	Subsample	N
CE	CE1	4,921
	CE2	4,921
	CE3	4,923
NCE	NCE1	4,601
	NCE2	4,601
	NCE3	4,603
CS	CS1	3,452
	CS2	3,452
	CS3	3,452

The three subsamples of each sample were subjected to Chi-square tests on several demographic variables to ensure that they were comparable in composition (e.g., subsamples CE1, CE2, and CE3 were tested to ensure they did not have statistically significant different numbers of males vs. females, etc). No differences were found.

Analyses

Data analyses proceeded in the following steps:

Item Validity/LISREL Analyses

Step 1: Initial Confirmatory Factor Analysis and Model Shaping. Results from the initial set of confirmatory factor analyses would provide the foundation for model validation and shaping in all the samples. Therefore, the consortium employees were chosen for the initial analyses because, (1) it seemed best to establish this foundation using an employee sample since employees comprised the majority of the subjects, and (2) it was thought possible that the consortium subjects, being from only 10 different agencies, might comprise a more homogeneous sample than the nonconsortium and, therefore, might generate more comprehensible results.

A confirmatory factor analysis of the Work Unit Experiences items administered to the consortium employees was conducted on dataset CE1 (Consortium Employees, subsample 1) using the LISREL VIII software (Jöreskog & Sörbom, 1993). The analysis was performed on an item covariance matrix prepared prior to the factor analysis by LISREL's accompanying PRELIS 2 software. (During that preparation, items designated as reverse-scored were recoded using the scheme 1=5, 2=4, 4=2, and 5=1.) The measurement model (item-to-factor structure) for the initial factor analysis was specified by loading the climate items onto factors according to the a priori item-to-dimension assignments displayed in Appendix B. The resultant LISREL modification indices were examined to determine sources of stress in the model. Modifications to the factor loading matrix (the specification of which items load on which factors) and the residual covariance matrix (the specification of which errors were permitted to covary) were made as indicated by the modification indices if they were rationally sensible, and they were tested in subsequent factor analyses. This "model shaping" was halted when a factor structure was achieved that was deemed an acceptable fit to the data by the investigator.

This procedure was repeated for the Organizational Experiences items.

Step 2: Model Cross-Validation. The final factor structures from Step 1 (one for the Work Unit Experiences items and one for the Organization Experiences items), determined through an exploratory process of model shaping, were tested in a fresh subsample (CE2) via confirmatory factor analysis (LISREL VIII).

Step 3: Model Replication. The final factor structures above were tested as full replications in a consortium supervisor subsample (CS1; "full" because the consortium supervisors had been given the same Work Unit Experiences and Organizational Experiences items as the employees). In addition, those portions of the two models comprised of items common to the consortium and nonconsortium employee surveys were tested in a nonconsortium employee subsample (NCE1).

Step 4: Additional Items Administered to the Nonconsortium Sample. The items unique to the nonconsortium employee sample were subsequently added to the replication models, and their factorial validity was assessed in the same way that the measurement models were evaluated in the consortium samples in Step 1 above.

Step 5: Multiple Groups Analyses. Three sets of simultaneous (multiple groups) factor analyses were conducted to test the hypothesis of measurement equivalence across particular subgroups. The first tested measurement equivalence in male and female subgroups. The second involved subgroups of whites and African Americans. The third used age subgroups: an older group of persons 50 and over, and a younger group of persons under 50. The investigator deemed it sufficient for the scope of this study to conduct these tests only on one of the three samples. Hence, the CE1 and CE2 subsamples were combined, and for each set of multiple groups analyses, random samples of 1,300 were drawn per group.

Only τ-equivalence (measurement equivalence of the factor loading matrix) was tested, by examining the significance of the difference in χ^2 between models in which the factor loadings were freely estimated in the subgroups and models in which factor loadings were constrained equal across the subgroups. Significant differences meant a rejection of the hypothesis that the factor loading matrix was equal in two subgroups, indicating that differences exist in the meaning of one or more items between the groups.

Step 6: Cross-scales Analyses. To investigate whether respondents actually differentiated between the Work Unit and the Organizational levels, LISREL VIII was used to examine true score factor correlations between factors representing the same climate dimensions across the two levels. Five of the strongest factors common to both levels were specified in a measurement model (making ten factors in all). The test was imperfect because even common factors were not comprised of the same items. However, if the common factors had very high factor correlations (e.g., .9 or greater), and these were the highest correlations in the entire factor correlation matrix, then this would support the notion that respondents did not or could not differentiate between the levels when responding. This, in turn, would have implications for future survey construction.

Observed Score Subscale Reliability Analyses

Step 7: Reliability Analysis of Implied Subscales. The analyses in Steps 1 through 4 determined the most valid configuration of items to factors given the item composition of the Work Unit Experiences and the Organizational Experiences scales. Those results implied corresponding item-to-dimension (subscale) assignments. The preceding analyses all took place at the true score level, disattenuating for measurement error. Cronbach's Coefficient Alpha was subsequently used to evaluate the reliability of the implied subscales at the observed score level, which is critical to ascertain before subscales can be used in a diagnostic manner.

Interrater Agreement Analyses

Step 8: Interrater Agreement. The interrater agreement equations of Finn (1970) and Usala (1993) were used to calculate the degree to which respondents described a shared perception for each item, a critical response attribute for describing the climate of an organization. Poor interrater agreement on an item indicates that the responses on that item should not be reported. Further, such a result in the present study identifies items which might be of little use in subsequent surveys in their current form or administered to similar samples.

From information obtained in the above analyses, final item-to-dimension assignments were made, and these are presented in Appendix E.

RESULTS

Item Validity/LISREL Analyses

Initial Confirmatory Factor Analysis and Model Shaping

Work Unit Experiences Scales

Climate Factors and Item Assignments. Figure 1 shows the initial measurement model, using the CE1 subsample, that was tested via LISREL VIII. The model was of the Work Unit Experiences a priori factor structure comprised of 64 items. Master item numbers corresponding to the item numbers in all the appendices are shown in the indicator boxes. All factors were allowed to covary. Factor five, representing the Leadership and Commitment to Quality climate construct, had only one indicator; that indicator's residual variance was therefore constrained to be 0 and its factor loading to be 1.0 out of necessity, so that the factor could be defined. This model would not converge. Examination of an intermediate solution revealed that the source of the problem was item #48, loaded onto the Health-Enhancing Work Environment factor. This item is "C/T employees feel work-related stress." It is a reverse-scored item, under the assumption that a lack of work-related stress is a positive organizational attribute. The item was reverse-scored prior to this analysis. The observed-score covariance matrix was then examined, revealing that, contrary to expectation, after reverse-scoring this item it covaried negatively with virtually every other item in the Work Unit Experience scale, raising interesting speculation about how stress is perceived in the workplace.

The model was re-run with item #48 removed. This model converged and fit the data fairly well, $\chi^2(1814, N=4921) = 28376.08, p<.01$, GFI = .81[4] Table 3 shows the standardized factor loadings. There were several low factor loadings that needed to be evaluated, such as items #59 and #60 on Factor 10 (Family/Work/Life Balance). In addition, there was a general pattern of relatively low factor loadings for the reverse-scored items and employee-oriented items (items about the employees themselves rather than about what the organization provides to employees), suggesting the possibility that two method factors should be added to the model (these items and their initial loadings can be found in Table 6, discussed later). Finally, there were several sources of stress in the model as evidenced in the LISREL modification indices, both in the factor loading matrix and indicator residual covariance matrix; i.e., the solution indicated that several items should be loaded onto other factors, and the residuals of several items should be allowed to covary. Prior to introducing method factors, the 13-factor loading structure and the residual covariance structure were modified over several subsequent models. Modifications were made based on the degree of stress indicated by the indices and rational evaluation of each potential change to the model. For pedagogical purposes, the sequence of modifications in this model shaping are shown in

---

[4]The Chi-square statistics for all the measurement models in this study were significant due to the large sample sizes. Although it is conventional to report their significance, they should be ignored in favor of the goodness-of-fit indices.

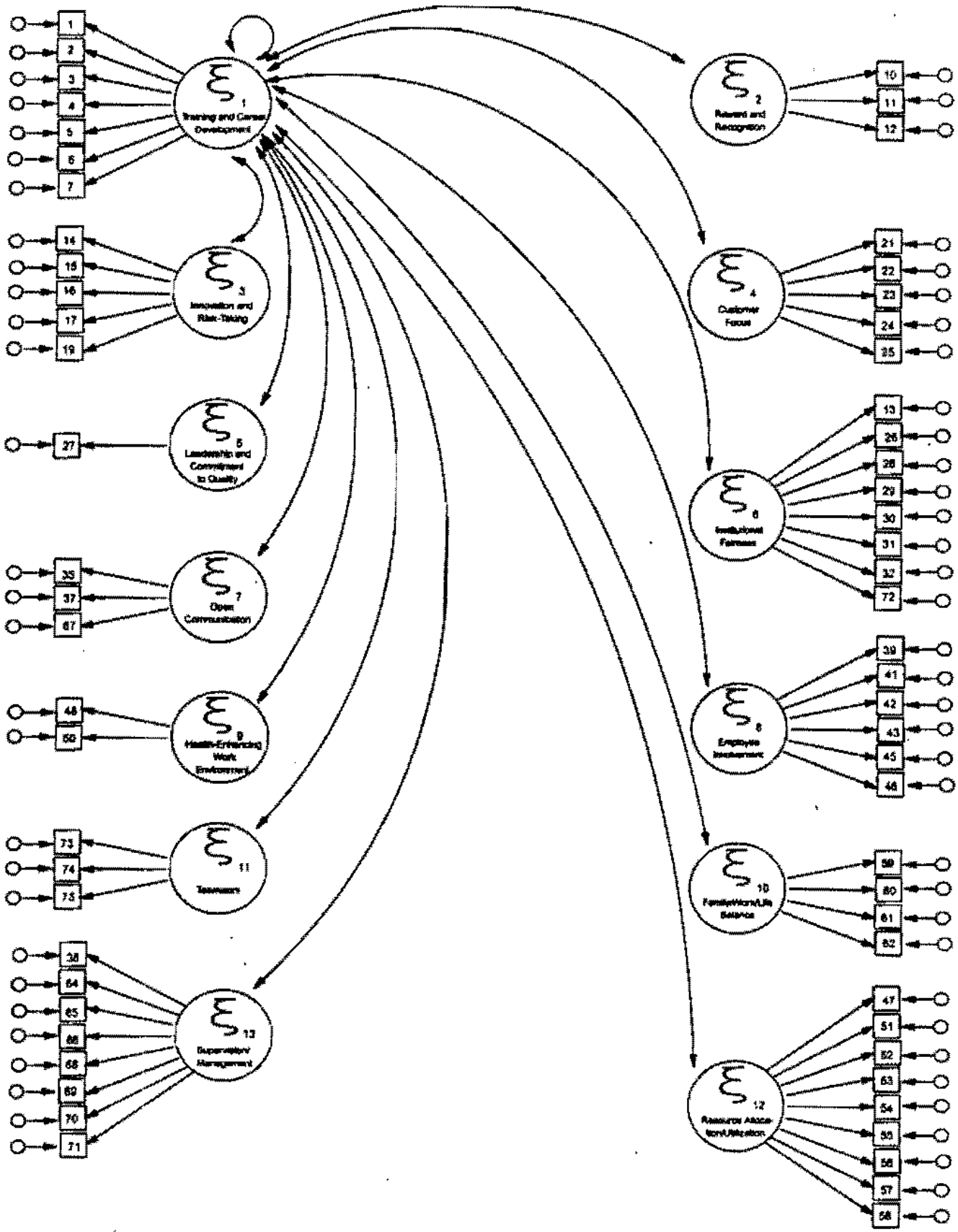

Figure 1. Initial Factor Model, Work Unit Experiences Scale, Consortium Employees

Note. Factor variances and covariances shown only for factor one for clarity; residual variances and covriances omitted for clarity.

Table 3
Factor Loadings, Initial Factor Model with Item #48 Removed
Work Unit Experiences Scale, Consortium Employee Subsample #1

Item	Factor 1	2	3	4	5	6	7	8	9	10	11	12	13
1	.72												
2	.66												
3	.74												
4	.60												
5	.71												
6	.79												
7	.68												
10		.74											
11		.73											
12		.78											
13						.73							
14			.75										
15			.30										
16			.60										
17			.57										
19			.53										
21				.62									
22				.70									
23				.54									
24				.66									
25				.50									
26						.37							
27					1.00								
28						.68							
29						.56							
30						.65							
31						.75							
32						.64							
35							.72						
37							.77						
38													.58
39								.72					
41								.77					
42								.31					
43								.63					
45								.39					
46								.71					
47												.50	
50									1.00				
51												.33	
52												.31	
53												.50	
54												.62	
55												.47	
56												.62	

(Continued)

Factor Codes

1 = Training and Career Development
2 = Reward and Recognition
3 = Innovation and Risk Taking
4 = Customer Focus
5 = Leadership and Commitment to Quality
6 = Institutional Fairness
7 = Open Communication
8 = Employee Involvement
9 = Health-Enhancing Work Environment
10 = Family/Work/Life Balance
11 = Teamwork
12 = Resource Allocation/Utilization
13 = Supervision/Management

Table 3 (Continued)

Item	Factor 1	2	3	4	5	6	7	8	9	10	11	12	13
57												.46	
58												.66	
59										.26			
60										.20			
61										.34			
62										.63			
64													.73
65													.78
66													.75
67							.73						
68													.81
69													.41
70													.80
71													.70
72						.77							
73											.78		
74											.83		
75											.64		

Factor Codes

1 = Training and Career Development
2 = Reward and Recognition
3 = Innovation and Risk Taking
4 = Customer Focus
5 = Leadership and Commitment to Quality
6 = Institutional Fairness
7 = Open Communication
8 = Employee Involvement
9 = Health-Enhancing Work Environment
10 = Family/Work/Life Balance
11 = Teamwork
12 = Resource Allocation/Utilization
13 = Supervision/Management

Appendix C. Modifications to the factor loading matrix were typically consistent with obvious item content; modifications allowing indicator residuals to covary appeared to be due to either very similar substantive item content or common phrases in the two items.

Figure 2 shows the final measurement model for the Work Unit Experiences scale, Consortium Employee sample. The model fit the data well, $\chi^2(1762, N=4921) = 14398.37$, $p < .01$, GFI = .91. Table 4 shows the standardized factor loadings for the final model, while changes in the item-to-factor assignments (excluding assignments involving method factors) between the initial and final models are shown in Table 5. The changes in factor assignments are sensible in that they involve items with a mixed-construct content. For example, the first item in Table 5 is "Supervisors are fair in rewarding C/T employee contributions." The item was originally written to measure Institutional Fairness, and indeed the item does reference "fair"-ness of a particular behavior. However, the behavior is also one of "supervisors" "rewarding" employees; obviously the item, in addition to measuring Institutional Fairness, also could measure aspects of "Supervision/Management" and "Reward and Recognition." LISREL modification indices for the initial model indicated that this item, although loading strongly on the Institutional Fairness factor, might better serve as an indicator of Reward and Recognition, and a series of model modifications bore this out. (When double-loaded onto the Reward and Recognition and the Institutional Fairness factors, its loadings were .61 and .25, respectively.) The analysis showed that in the context of the all the items in the model, the most salient construct in this item for respondents was

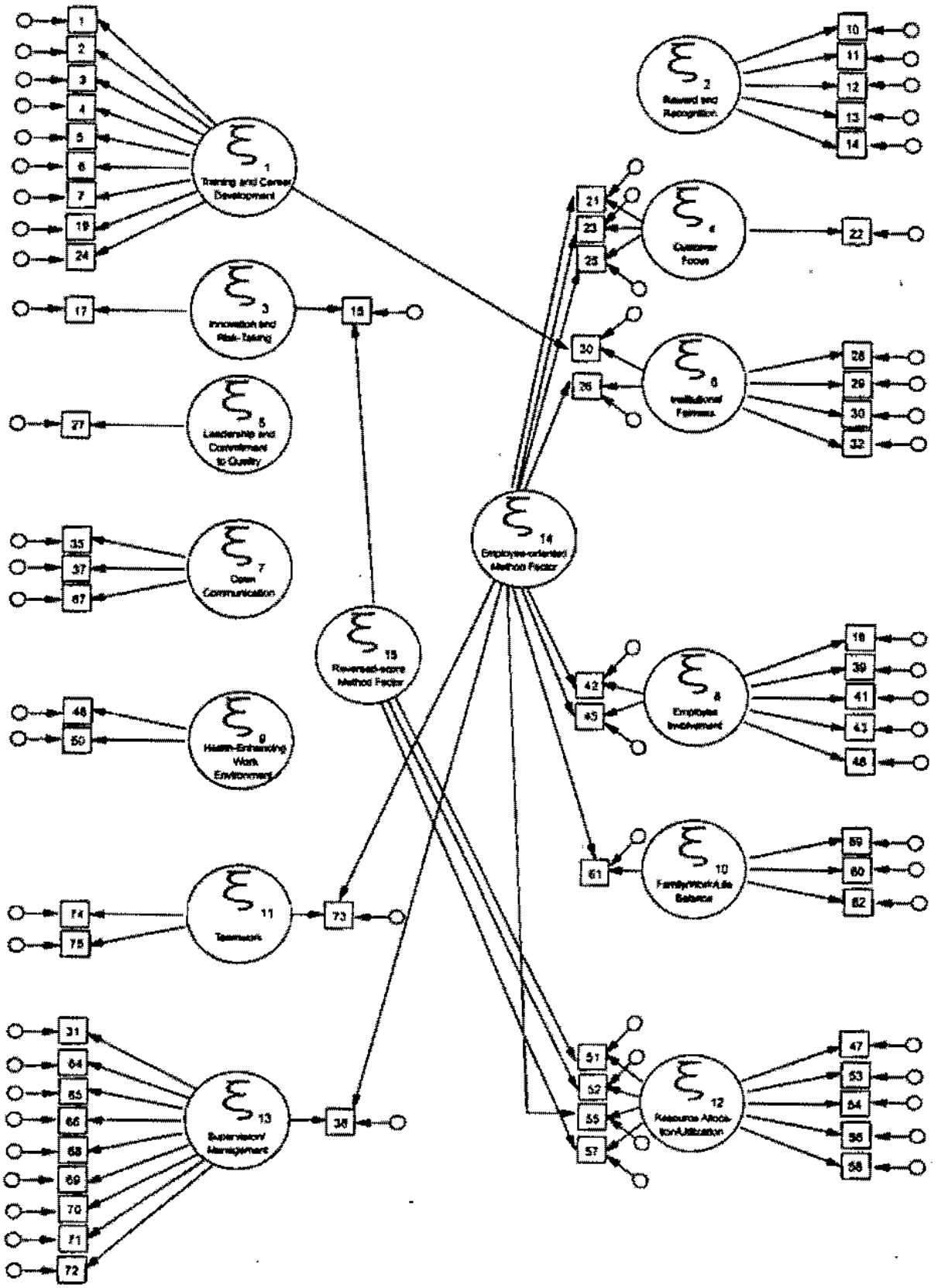

Figure 2. Final Factor Model, Work Unit Experiences Scale, Consortium Employees

Note. Factor and residual variances and covariances omitted for clarity.

Table 4
Factor Loadings, Final Factor Model
Work Unit Experiences Scale, Consortium Employee Subsample #1

Item	Factor 1	2	3	4	5	6	7	8	9	10	11	12	13	14	15
1	.73														
2	.66														
3	.72														
4	.60														
5	.71														
6	.78														
7	.66														
10		.67													
11		.65													
12		.78													
13		.80													
14		.84													
15			.38												.22
16								.63							
17			.57												
19	.62														
21				.60										.19	
22				.83											
23				.47										.17	
24	.70														
25				.24										.57	
26						.18								.63	
27					1.00										
28						.75									
29						.63									
30	.36					.41									
31													.74		
32						.69									
35							.66								
37							.72								
38													.56	.14	
39								.72							
41								.77							
42								.09						.60	
43								.63							
45								.20						.53	
46								.71							
47												.47			
50									1.00						
51												.59			.73
52												.52			.56
53												.50			
54												.65			
55												.43		.29	
56												.58			

(Continued)

Factor Codes

1 = Training and Career Development
2 = Reward and Recognition
3 = Innovation and Risk Taking
4 = Customer Focus
5 = Leadership and Commitment to Quality
6 = Institutional Fairness
7 = Open Communication
8 = Employee Involvement
9 = Health-Enhancing Work Environment
10 = Family/Work/Life Balance
11 = Teamwork
12 = Resource Allocation/Utilization
13 = Supervision/Management
14 = Employee-oriented Items Method Factor
15 = Reverse-scored Items Method Factor

Table 4 (Continued)

Item	Factor 1	2	3	4	5	6	7	8	9	10	11	12	13	14	15
57												.50			.28
58												.56			
59										.28					
60										.19					
61										.15				.48	
62										.69					
64													.71		
65													.75		
66													.71		
67							.69								
68													.79		
69													.40		
70													.82		
71													.70		
72													.79		
73											.72			.13	
74											.84				
75											.64				

Factor Codes

1 = Training and Career Development
2 = Reward and Recognition
3 = Innovation and Risk Taking
4 = Customer Focus
5 = Leadership and Commitment to Quality
6 = Institutional Fairness
7 = Open Communication
8 = Employee Involvement
9 = Health-Enhancing Work Environment
10 = Family/Work/Life Balance
11 = Teamwork
12 = Resource Allocation/Utilization
13 = Supervision/Management
14 = Employee-oriented Items Method Factor
15 = Reverse-scored Items Method Factor

Reward and Recognition; i.e., the item was most meaningful as measuring that construct. This is not to say that the item does not measure the other constructs and could not be used as an indicator for them.

One item (#30) was left double-loaded on Institutional Fairness and Training and Career Development. The item reads, "Decisions about training and career development opportunities (e.g., job assignments) for C/T employees are fair," and its loadings on the two factors were .41 and .36, respectively. In such instances, LISREL analyses are inconclusive regarding an item's most salient construct. This item's final item assignment for subscale scoring was based on subsequent reliability (coefficient α) analysis.

Method Factors. One of the most important features of the final factor model is the presence of two method factors -- one for Employee-oriented items, and one for Reverse-scored items -- and their implications for construct measurement. Prior to running any analyses, the researcher noted that while most items (and all the a priori climate definitions) were about what the organization provides or does to employees, a few items were about the clerical and technical employees themselves. These were denoted as "employee-oriented" items, and the modification indices of the LISREL results indicated that a method factor for these items might exist. Such a factor would mean that respondents provided answers to these items that were at least partly based on the fact that they were about the employees, regardless of the construct they were intended to measure. (Because the a priori dimension

Table 5
Item-to-(Non-Method)Factor Assignment Changes Between Initial and Final Factor Models
Work Unit Experiences Scale, Consortium Employee Subsample #1

	Item	Initial Factor	Final Factor
#13	Supervisors are fair in rewarding C/T employee contributions.	Institutional Fairness	Reward and Recognition
#14	C/T employees are rewarded for showing creativity and innovation.	Innovation	Reward and Recognition
#16	C/T employees are encouraged to come up with new and better ways of doing things.	Innovation	Employee Involvement
#19	C/T employees receive training when new technologies and tools are introduced.	Innovation	Training and Career Development
#24	C/T employees receive training and guidance in providing high quality products and services to customers.	Customer Focus	Training and Career Development
#30	Decisions about training and career development opportunities (e.g., job assignments) for C/T employees are fair.	Institutional Fairness	Institutional Fairness Training and Career Development
#31	Supervisors treat C/T employees with respect.	Institutional Fairness	Supervision/Management
#72	There is trust between C/T employees and their supervisors.	Institutional Fairness	Supervision/Management

definitions in Table 2 were written in terms of organizational qualities, the unique variance attributed to the employee-orientation of these items was considered method variance.) Likewise, it should be routine practice to look for method factors for reverse-scored items when such items are used with nonreverse-scored items, and indeed the modification indices indicated the possibility of such a factor. These two method factors were modeled in the final stage of model shaping. The items that comprised these factors are listed in Table 6; included in this table are their factor loadings (λ) on their respective method factors as well as their loadings on their substantive construct factors, both before the method factors were specified and in the presence of the method factors. These items are considered separately from the other changes to the initial model shown in Table 5 for an important reason. Unlike the model shaping regarding the substantive construct factors, the goal here was not to identify only items with high loadings on method factors. Items were loaded onto method factors for theoretical reasons, and left on them regardless of the size of their factor loadings. The property of the items which makes them method-factor items is inherent in their structure. One can "discover" that an item originally intended to measure Institutional Fairness was actually interpreted more as measuring Reward and Recognition by the respondents, and thus that item can be unloaded from the factor representing Institutional Fairness and loaded on the Reward and Recognition factor. However, it makes no sense to unload an item that was reverse-scored from the Reversed-score method factor even if its loading is low; there is no evidence or "discovery" that can change the fact that the item

Table 6
Items Comprising the Two Method Factors in the Final Model
Work Unit Experiences Scale, Consortium Employee Subsample #1

Item		Method Factor λ	Substantive Construct Factor (λ before/ λ in Presence of Method Factor)
Employee-Oriented Method Factor			
#21	C/T employees have a good understanding of who they serve as customers.	.19	Customer Focus (.68/.60)
#23	C/T employees use suggestions from their customers to improve the quality of products and services.	.17	Customer Focus (.56/.47)
#25	C/T employees are committed to providing high quality products and services to customers.	.57	Customer Focus (.52/.24)
#26	C/T employees live up to high ethical standards.	.63	Institutional Fairness (.42/.18)
#38	C/T employees openly discuss their needs and concerns with supervisors.	.14	Supervision/Management (.59/.56)
#42	C/T employees take the initiative to meet work goals and deadlines.	.60	Employee Involvement (.30/.09)
#45	C/T employees look for ways to improve the quality of products, services, and work processes.	.53	Employee Involvement (.39/.20)
#55	C/T employees have the right mix of skills and knowledge to accomplish work goals.	.29	Resource Allocation/Utilization (.52/.43)
#61	C/T employees do not allow personal activities to interfere with work (e.g., frequent absenteeism, lengthy personal phone calls).	.48	Family/Work/Life Balance (.33/.15)
#73	A spirit of cooperation and teamwork exists among C/T employees.	.13	Teamwork (.78/.72)
Reversed-Score Method Factor			
#15	C/T employees find it difficult to change the way things are done.	.22	Innovation and Risk Taking (.28/.38)
#51	Interruptions make it difficult for C/T employees to finish their work on time.	.73	Resource Allocation/Utilization (.30/.59)

(Continued)

Table 6 (Continued)

Item		Method Factor λ	Substantive Construct Factor (λ before/ λ in Presence of Method Factor)
#52	Having to get approval from others slows down C/T employees' work.	.56	Resource Allocation/Utilization (.31/.52)
#57	The amount of work keeps C/T employees from providing high quality products and services.	.28	Resource Allocation/Utilization (.39/.50)

was indeed reverse-scored. The purpose of modeling method factors is twofold: (1) to remove systematic error variance from the substantive construct portions of the model, so that the "true" relationships with the construct factors are more clearly discernible, and (2) to examine how much of the variance in responses for an item is due to systematic error. Items with low loadings on method factors and high loadings on their construct factors are good indicators of the substantive construct regardless of their structural wording; those with the reverse results are items whose structural wording causes the response variance to be largely a result of measurement error.

Employee-oriented Factor. The results shown in Table 6 are very revealing. While stochastic (random) measurement error always serves to suppress correlational relationships, systematic measurement error may serve to either suppress or artifactually inflate such relationships, depending on the variables involved. First, notice the five items with factor loadings over .3 on the Employee-oriented method factor. The items cover four different construct factors, and as a whole, the items do not seem to have a great deal in common other than that they are positive statements about clerical and technical employees. This suggests that the factor is not merely an alternative climate construct factor, but rather one representing the employee-oriented structure of the items.[5] All of these five items had moderate to somewhat low loadings on their construct factors prior to the specification of the method factor, and had very low loadings on these factors in the presence of the method factor. This suggests that the response variance in these items is largely a result of systematic error, and that their original significant loadings on their construct factors was due to error covariance among these items being expressed through the construct factors in the absence of direct covariance in the model via either a method factor or residual covariance. Alternatively, some of the other Employee-oriented method factor items have nonsignificant loadings, and their loadings on their respective construct factors were essentially unaffected by the introduction of the method factor. These items are ones for which their construct

[5]Further evidence of this is found in the factor correlation matrix for the final model (Table 8). The highest factor correlation with the Employee-oriented factor was its correlation with the Health-Enhancing Work Environment factor, which was a single-indicator factor whose item therefore could not be double-loaded on method factor. Its item is also an employee-oriented item.

meaning was the more salient feature to respondents. Depending on other information such as their construct factor loadings and factor correlations, these latter items remain good candidates for use in future surveys.

Reversed-score Factor. The Reversed-score method factor presents a striking example of the alternative situation. As Table 6 shows, the construct factor loadings for all four of the reverse-scored items increased impressively when the method factor was specified in the model. This demonstrates how measurement error can suppress correlational relationships. While the true response variance related to the substantive construct for these items is substantial, this relationship is largely masked by error variance. Because the observed item score, containing the measurement error, is used to make judgments about people and organizations, one should have reservations about using the scores from these items and about using these items in future surveys (with the possible exception of item of item #57, whose loading on the method factor was only .28 and whose construct factor loading in the absence of the method factor was a respectable .39). While not a condemnation of reverse-scored items general, it seems that the way these particular items were constructed or used in this survey induced an unacceptable amount of measurement error in the participants' responses.

Correlated Residuals. Table 7 shows the items in the final model for which correlated residuals were specified. Residuals were allowed to correlate based on LISREL modification indices and rational judgment. Note how much sense each of these correlated residuals makes. Almost all of them are between items with a common phrase in their wording (e.g, "C/T employees are provided with...," "High performing C/T employees are...," etc.). Correlated residuals represent systematic measurement error, as do method factors (in fact, method factors can be alternatively represented as correlated residuals among all the associated items). The presence of these significant correlated residuals demonstrates the powerful effect of particular wording in item construction. However, unlike the items associated with the method factors discussed above, these correlated residuals are typically viewed much less seriously. They are specified to assess how well a model of item-to-factor relationships represents the data when such error is removed from the construct factor space. The fact that two items on the Reward and Recognition factor also apparently systematically vary with each other because they begin with "High performing C/T employees are..." (items #10 and #11) is not cause in and of itself to make their responses suspect, given that "high performing C/T employees" is a reasonable topic when discussing reward issues. As a rule, the implications of correlated residuals should be considered on a case-by-case basis; for the present study, none of these correlated residuals seemed cause for concern other than noting the impact of item wording for future item writing.

Factor Correlations. The factor correlation matrix for the final model is presented in Table 8. There are many high correlations, several .9 or greater. These suggest that several factors are redundant and might be collapsed. Additioinal analyses not done in this study, such as higher-order factor analyses, could be conducted to investigate this further. Likewise, it was unfortunate that differential validity analyses with important organizational outcomes, which would have shed light on the possible usefulness of separate but highly-correlated factors, was not possible in this study. Because all responses were collected using the same survey format, method variance due to this common format could be a likely source

Table 7
Correlated Residuals, Final Factor Model
Work Unit Experiences Scale, Consortium Employee Subsample #1

Items 3 and 7
#3: C/T employees are provided with frequent opportunities to learn, update, and expand their knowledge and skills.
#7: C/T employees are provided with training that enhances their career development and their advancement opportunities (e.g., through cross-training, detail assignments).

Items 10 and 11
#10: High performing C/T employees are rewarded with more challenging and rewarding work.
#11: High performing C/T employees are promoted.

Items 13 and 64
#13: Supervisors are fair in rewarding C/T employee contributions.
#64: Supervisors provide fair and accurate ratings of C/T employee performance.

Items 35 and 37
#35: C/T employees are kept well informed on all issues affecting their job.
#37: Information flows freely from supervisors to C/T employees.

Items 47 and 53
#47: C/T employees have enough work space to do their work.
#53: C/T employees have the appropriate supplies, materials, and equipment to perform their jobs well.

Items 56 and 58
#56: Work is planned so that it can be accomplished during scheduled work hours.
#58: There is enough time for C/T employees to do their jobs in a professional manner.

Items 57 and 58
#57: The amount of work keeps C/T employees from providing high quality products and services.
#58: There is enough time for C/T employees to do their jobs in a professional manner.

Items 59 and 60
#59: C/T employees are given the opportunity to work on flexible work schedules, when the job permits (e.g., Flexitime, Alternative Work Schedule, part-time employment).
#60: C/T employees are given the opportunity to work at home, when the job permits (e.g., Flexiplace, work-at-home).

Items 65 and 66
#65: Supervisors provide C/T employees with constructive suggestions to improve their job performance.
#66: Supervisors clearly communicate what is expected of C/T employees in terms of job performance (e.g., task responsibilities, performance standards).

Items 66 and 67
#66: Supervisors clearly communicate what is expected of C/T employees in terms of job performance (e.g., task responsibilities, performance standards).
#67: Supervisors clearly communicate to C/T employees the goals and priorities of the work unit.

Table 8
Factor Correlations, Final Factor Model (Decimals omitted)
Work Unit Experiences Scale, Consortium Employee Subsample #1

Factor	1	2	3	4	5	6	7	8	9	10	11	12	13	14	15
1	-														
2	70	-													
3	90	80	-												
4	50	43	66	-											
5	55	57	69	45	-										
6	65	72	76	42	59	-									
7	79	76	91	54	72	83	-								
8	70	76	94	52	67	73	92	-							
9	17	14	33	33	19	15	24	92	-						
10	55	60	75	41	51	68	81	72	26	-					
11	53	52	64	36	45	69	69	62	24	58	-				
12	65	51	73	42	41	59	68	57	31	60	51	-			
13	69	73	81	45	64	79	1	85	23	88	68	63	-		
14	18	16	40	28	23	33	26	29	45	19	42	23	25	-	
15	-37	-29	-49	-22	-22	-29	-34	-32	-22	-33	-27	-44	-36	-23	-

Factor Codes

1 = Training and Career Development
2 = Reward and Recognition
3 = Innovation and Risk Taking
4 = Customer Focus
5 = Leadership and Commitment to Quality
6 = Institutional Fairness
7 = Open Communication
8 = Employee Involvement
9 = Health-Enhancing Work Environment
10 = Family/Work/Life Balance
11 = Teamwork
12 = Resource Allocation/Utilization
13 = Supervision/Management
14 = Employee-oriented Items Method Factor
15 = Reverse-scored Items Method Factor

of some of the covariance. However, true score factor correlations are also often much higher than observed score dimension correlations because measurement error from other sources, which attenuates factor covariance, is removed from the factor space. One of the factor correlations of particular note, though, was the factor correlation between Open Communication and Supervision/Management; it was 1.0, undoubtedly because all three of the Open Communication items deal with stated or implied communication from superiors to employees. These two factors were therefore collapsed for subsequent observed score analysis (coefficient α) and scoring without any further supporting analyses.

Organizational Unit Experiences Scales

Climate Factors and Item Assignments. The a priori measurement model for the Organizational Unit Experiences scales, comprised of 67 items, is implicitly represented in Table 9 which shows the standardized factor loadings for the model. The model fit the data

Table 9
Factor Loadings, Initial Factor Model
Organizational Experiences Scale, Consortium Employee Subsample #1

Item	Factor 1	2	3	4	5	6	7	8	9	10	11	12	13	14	15	16
76	.75															
77	.80															
78	.71															
79		.73														
80		.73														
81		.80														
82		.69														
84			.46													
88			.66													
89			.69													
90				.46												
92				.60												
93					.77											
94					.77											
95					.77											
96					.68											
97				.57												
98					.71											
99					.72											
100						.75										
101						.63										
104												.67				
105												.32				
107												.44				
108												.55				
109												.62				
110												.38				
111												.57				
112												.74				
113												.48				
115												.65				
118							.71									
119							.87									
120							.83									
123								1.00								
125									.70							
126									.77							
127									.40							
130										.66						
131										.55						

(Continued)

Factor Codes

1 = Training and Career Development
2 = Reward and Recognition
3 = Innovation and Risk Taking
4 = Customer Focus
5 = Leadership and Commitment to Quality
6 = Institutional Fairness
7 = Open Communication
8 = Employee Involvement
9 = Health-Enhancing Work Environment
10 = Family/Work/Life Balance
11 = Teamwork
12 = Diversity
13 = Social Responsibility
14 = Job Security and Commitment to Workforce
15 = Strategic Planning
16 = Measurement and Analysis

Table 9 (Continued)

Item	Factor 1	2	3	4	5	6	7	8	9	10	11	12	13	14	15	16
134													.39			
135													.32			
136													.35			
137													.85			
138													.84			
140													.38			
141														.92		
142														.91		
143														.56		
145														.04		
146														.29		
148											.62					
149											.68					
150											.78					
151															.76	
152															.81	
153																.71
154															.61	
155															.76	
156																.62
157																.66
158																.59
159																.55
160				.67												
161																.72
162																.74
163																.57

Factor Codes

1 = Training and Career Development
2 = Reward and Recognition
3 = Innovation and Risk Taking
4 = Customer Focus
5 = Leadership and Commitment to Quality
6 = Institutional Fairness
7 = Open Communication
8 = Employee Involvement
9 = Health-Enhancing Work Environment
10 = Family/Work/Life Balance
11 = Teamwork
12 = Diversity
13 = Social Responsibility
14 = Job Security and Commitment to Workforce
15 = Strategic Planning
16 = Measurement and Analysis

fairly well, χ^2 (2025, N=4921) = 28609.04, $p < .01$, GFI = .83. All factor loadings were above .3 except two: items #145 and #146 on the Job Security and Commitment to Workforce factor (loadings of .04 and .29, respectively). It seemed reasonable that item #145, which reads "C/T employees are willing to be retrained and moved to other positions in the organization to protect their employment security," might be a poor indicator of a strong *commitment* on the part of the organization to job security. However, it also seemed that item #146, which reads "C/T employees are provided with job security," should *define* a commitment by the organization to job security for its employees. These two items were retained and evaluated during subsequent modeling; item #145 was ultimately dropped from the final model because it was not related to any factor, while the loading for item #146 improved to an acceptable (although still disconcertingly low) .36 in the final model.

The initial model underwent four modifications. The fifth and final model fit the data well, χ^2 (1942, N=4921) = 15186.92, $p<.01$, GFI = .90. The standardized factor loadings for this model are presented in Table 10. Changes in item-to-factor assignment between the initial and final models are presented in Table 11.

Method Factors. Although there were six items which have an employee-orientation (#108, 113, 123, 138, 140, and 145), unlike the Work Unit Experiences analysis, there was no evidence that their measurement error correlated to form a method factor, and so none was specified. (There was only one reverse-scored item -- item #105 -- preventing an evaluation of a possible Reversed-score method factor.)

Correlated Residuals. Correlated residuals in the Organizational Experiences measurement model are shown in Table 12. As for the Work Unit Experiences model, common phrasing is the most obvious explanation for most of the residual correlations, and there appears to be no special cause for concern. Allowing these residuals to correlate afforded the opportunity to better evaluate what the relationship between what the items were measuring and their associated construct factor, as well as considering implications for future item writing.

Factor Correlations. The correlations among the factors for this model are shown in Table 13. Several are quite high (in the .9 range), but none imply an obvious situation where factors should be collapsed. Unlike the Work Unit Experiences model, the correlations with the Open Communication factor suggest that an Open Communication dimension should be retained for observed variable scoring.

Model Cross-Validation

The final Work Unit Experiences measurement model specified in the analysis of the CE1 sample was tested in the CE2 sample. The model fit the data well, χ^2 (1762, N=4921) = 14355.03, $p<.01$, GFI = .91. Likewise, the final measurement model for the Organizational Experiences items cross-validated in the CE2 sample, χ^2 (1942, N=4921) = 15526.30, $p<.01$, GFI = .90.

Model Replication

Consortium Supervisors

Because the same items were administered to the consortium supervisors and consortium employees, the final Work Unit Experiences and Organizational Experiences measurement models derived using the CE1 employee subsample could be tested in their entirety on the CS1 supervisor subsample. Both models replicated adequately in this sample: χ^2 (1762, N=4601) = 13203.88, $p<.01$, GFI = .88, and χ^2 (1942, N=4601) = 12659.62, $p<.01$, GFI = .88, for the Work Unit and Organizational Experiences models, respectively.

Table 10
Factor Loadings, Final Factor Model
Organizational Experiences Scale, Consortium Employee Subsample #1

Item	Factor 1	2	3	4	5	6	7	8	9	10	11	12	13	14	15	16
76	.79															
77	.87															
78						.73										
79		.62														
80		.61														
81		.81														
82		.63														
84			.45													
88			.66													
89			.69													
90				.46												
92				.59												
93					.76											
94					.74											
95					.75											
96					.68											
97				.57												
98					.71											
99					.73											
100						.72										
101						.62										
104												.67				
105												.34				
107												.43				
108												.55				
109						.62										
110												.37				
111												.59				
112												.76				
113												.47				
115							.72									
118							.78									
119							.72									
120							.67									
123								1.00								
125									.70							
126									.81							
127										.58						
130										.65						
131										.57						

(Continued)

Factor Codes

1 = Training and Career Development
2 = Reward and Recognition
3 = Innovation and Risk Taking
4 = Customer Focus
5 = Leadership and Commitment to Quality
6 = Institutional Fairness
7 = Open Communication
8 = Employee Involvement
9 = Health-Enhancing Work Environment
10 = Family/Work/Life Balance
11 = Teamwork
12 = Diversity
13 = Social Responsibility
14 = Job Security and Commitment to Workforce
15 = Strategic Planning
16 = Measurement and Analysis

Table 10 (Continued)

Item	Factor 1	2	3	4	5	6	7	8	9	10	11	12	13	14	15	16
134										.64						
135													.49			
136													.63			
137													.48			
138													.46			
140													.44			
141		.73														
142		.72														
143														.63		
145 *																
146														.36		
148											.55					
149											.62					
150											.80					
151															.69	
152															.74	
153															.71	
154															.64	
155															.76	
156																.62
157																.63
158																.58
159																.55
160				.67												
161																.69
162																.71
163																.58

* Dropped from model

Factor Codes

1 = Training and Career Development
2 = Reward and Recognition
3 = Innovation and Risk Taking
4 = Customer Focus
5 = Leadership and Commitment to Quality
6 = Institutional Fairness
7 = Open Communication
8 = Employee Involvement
9 = Health-Enhancing Work Environment
10 = Family/Work/Life Balance
11 = Teamwork
12 = Diversity
13 = Social Responsibility
14 = Job Security and Commitment to Workforce
15 = Strategic Planning
16 = Measurement and Analysis

Nonconsortium Employees

Work Unit Experiences Scales. The nonconsortium employees received of all the 64 Work Unit Experiences items that did the consortium employees (plus additional ones); therefore, the entire, final measurement model (of the 64 items) derived using the CE1 subsample was tested in the nonconsortium employee NCE1 subsample. The model fit the data well, χ^2 (1762, N=4601) = 14098.37, $p<.01$, GFI = .90.

Table 11
Changes in Item-to-Factor Assignments Between the Initial and Final Factor Models
Organizational Experiences Scale, Consortium Employee Subsample #1

	Item	Initial Factor	Final Factor
#78	Supervisors and managers serve as coaches and mentors to help C/T employees advance in their careers.	Training and Career Development	Institutional Fairness
#109	Advancement opportunities are available for top qualified C/T employees, regardless of sex, race, national origin, cultural background, or disability.	Diversity	Institutional Fairness
#115	Managers encourage C/T employees to express their own preferences, beliefs, and opinions.	Diversity	Open Communication
#127	Programs that encourage good health practices are promoted (e.g., fitness centers, health education programs).	Health-Enhancing Work Environment	Family/Work/Life Balance
#134	There is an organizational commitment to improving community life (e.g., partnerships with schools).	Social Responsibility	Family/Work/Life Balance
#141	C/T employees are rewarded for having the skills to perform many different work roles.	Job Security and Commitment to Workforce	Reward and Recognition
#142	C/T employees are rewarded for being knowledgeable about several areas/functions of the organization.	Job Security and Commitment to Workforce	Reward and Recognition
#145	C/T employees are willing to be retrained and moved to other positions in the organization to protect their employment security.	Job Security and Commitment to Workforce	*dropped from model*
#153	Managers regularly review the organization's progress toward meeting its goals and objectives.	Measurement and Analysis	Strategic Planning

Organizational Experiences Scales. Only 51 of the 67 Organizational Experiences items administered to the consortium employees were included in the nonconsortium employee survey. A measurement model comprised of these 51 items representing their factor structure in the CE1 sample was tested in the NCE1 sample, and the model fit the data well, χ^2 (1124, N=4601) = 9271.74, $p<.01$, GFI = .92.

Additional Items Administered to the Nonconsortium Sample

After replicating those portions of the measurement models common to the consortium and nonconsortium samples, the next analyses were undertaken to obtain information on which to base item-to-subscale assignments for the rest of the climate items. The purpose was not to necessarily develop the best fitting model; therefore, modifications were kept to a minimum, particularly modifications to the residual covariance matrix.

Table 12
Correlated Residuals, Final Factor Model
Organizational Experiences Scale, Consortium Employee Subsample #1

Items 79 and 80
#79: High performing C/T employees receive monetary rewards (e.g., cash awards, bonuses, quality step increases).
#80: High performing C/T employees receive non-monetary rewards (e. g., plaques, letters of appreciation).

Items 79 and 82
#79: High performing C/T employees receive monetary rewards (e.g., cash awards, bonuses, quality step increases).
#82: High performing C/T employees are publicly recognized (e.g., organization-wide award ceremony, recognition in newsletter).

Items 80 and 82
#80: High performing C/T employees receive non-monetary rewards (e. g., plaques, letters of appreciation).
#82: High performing C/T employees are publicly recognized (e.g., organization-wide award ceremony, recognition in newsletter).

Items 84 and 159
#84: There is an investment in technologies (e.g., computers, FAX machines) that make C/T employees' work more efficient and easy to perform.
#159: Appropriate advanced technology and tools are used in all work processes and in information collection.

Items 94 and 95
#94: Managers ask C/T employees about ways to improve the work produced.
#95: Managers follow up on C/T employee suggestions for improvements in products, services, and work processes.

Items 101 and 109
#101: The promotion system is fair.
#109: Advancement opportunities are available for top qualified C/T employees, regardless of sex, race, national origin, cultural background, or disability.

Items 104 and 108
#104: Differences among C/T employees (e.g., sex, race, national origin, age, cultural background) are appreciated.
#108: C/T employees value the racial and cultural differences of others.

Items 107 and 110
#107: Persons with disabilities are accepted and feel part of the organization.
#110: Accommodations are made for persons with disabilities (e.g., availability of sign language interpreters, ramps, braille).

Items 108 and 113
#108: C/T employees value the racial and cultural differences of others.
#113: C/T Employees treat each other with courtesy and respect.

Items 119 and 120
#119: Managers openly communicate about the organization's conditions, operations, and choices it faces.
#120: Managers openly communicate about the organization's future plans.

(Continued)

Table 12 (Continued)

Items 137 and 138
#137: There are policies and practices that reflect a commitment to preserving and restoring environmental health (e.g., recycling, pollution control).
#138: C/T employees assist the organization in meeting its commitment to preserving and restoring environmental health (e.g., participate in recycling).

Items 141 and 142
#141: C/T employees are rewarded for having the skills to perform many different work roles.
#142: C/T employees are rewarded for being knowledgeable about several areas/functions of the organization.

Items 148 and 149
#148: Different work units cooperate to get the job done.
#149: C/T employees in different work units participate in cross-unit teams to improve the quality of products and services, and to solve problems.

Items 151 and 152
#151: Managers plan for the organization's future.
#152: Managers set long-term quality improvement goals and objectives.

Items 151 and 153
#151: Managers plan for the organization's future.
#153: Managers regularly review the organization's progress toward meeting its goals and objectives.

Items 157 and 158
#157: Formal attempts are made to measure the extent to which the organization is meeting its goals and objectives.
#158: The quality of products and services provided to customers is compared to the performance of other organizations that are recognized as successful.

Items 161 and 162
#161: Comprehensive assessments of quality, quality systems and quality processes are performed at regular intervals across the organization.
#162: Findings from the quality assessment process are used to improve quality and prevent problems.

Work Unit Experiences Scales. An a priori measurement model using the NCEI sample and all 75 of the Work Unit Experiences items provided a poor fit to the data, χ^2 (2611, N=4601) = 44991.08, $p<.01$, GFI = .67. A subsequent model which incorporated all the modifications made in the analysis of the CEI sample (i.e., changes to the factor loading matrix, correlated residuals, and inclusion of the two method factors) fit the data fairly well, χ^2 (2558, N=4601) = 28753.93, $p<.01$, GFI = .81. However, it was apparent that the Reversed-score method factor, which seemed to generate negative factor loadings on the construct factors for the reverse-scored indicators, was unwarranted in this sample; correlated residuals among these items in place of a method factor likewise proved unwarranted. Why a method factor would be clearly indicated in the consortium sample but not the nonconsortium sample is unknown.

All the items unique to the nonconsortium sample were Employee-oriented items, and were subsequently loaded onto the Employee-oriented method factor. The final factor structure for

Table 13
Factor Correlations, Final Factor Model (Decimals omitted)
Organizational Experiences Scale, Consortium Employee Subsample #1

Factor	1	2	3	4	5	6	7	8	9	10	11	12	13	14	15	16
1	-															
2	60	-														
3	66	78	-													
4	60	57	79	-												
5	66	80	93	77	-											
6	70	90	86	62	88	-										
7	60	74	86	66	90	88	-									
8	30	33	43	39	44	38	46	-								
9	34	40	48	46	42	48	45	22	-							
10	41	45	50	44	46	46	49	22	43	-						
11	57	75	79	70	80	77	81	38	46	47	-					
12	50	64	66	61	70	83	73	31	46	44	65	-				
13	51	63	63	60	63	60	61	32	44	79	60	60	-			
14	70	87	83	57	79	90	80	36	54	66	68	69	74	-		
15	66	72	85	75	88	82	86	43	50	51	86	67	68	76	-	
16	67	67	80	96	85	74	79	40	50	50	83	63	65	67	91	-

Factor Codes

1 = Training and Career Development
2 = Reward and Recognition
3 = Innovation and Risk Taking
4 = Customer Focus
5 = Leadership and Commitment to Quality
6 = Institutional Fairness
7 = Open Communication
8 = Employee Involvement
9 = Health-Enhancing Work Environment
10 = Family/Work/Life Balance
11 = Teamwork
12 = Diversity
13 = Social Responsibility
14 = Job Security and Commitment to Workforce
15 = Strategic Planning
16 = Measurement and Analysis

the Work Unit Experiences items in the NCE1 sample is shown in Table 14. The model contains neither a Reversed-score method factor nor correlated residuals among the reverse-scored items. No changes were made to the a priori item-to-construct factor assignments for the NCE-unique items, nor were any correlated residuals for these items added to the model. This model fit the data well, χ^2 (2493, N=4601) = 20394.26, $p<.01$, GFI = .88. The Employee-oriented items and their loadings on that method factor are shown in Table 15, and the factor correlations are displayed in Table 16.

Organizational Experiences Scales. The a priori measurement model for the 73 Organizational Experiences items fit the data moderately well, χ^2 (2452, N=4601) = 34509.38, $p<.01$, GFI = .79. The final measurement model included the modifications made in the prior analyses on the consortium employee sample; no sensible modifications to the factor loading matrix were indicated by the modification indices. This model was a

Table 14
Factor Loadings, Final Factor Model
Work Unit Experiences Scale, Nonconsortium Employee Subsample #1

Item	Factor 1	2	3	4	5	6	7	8	9	10	11	12	13	14	15
1	.76														
2	.67														
3	.77														
4	.59														
5	.70														
6	.82														
7	.71														
8							.39								.28
9														1.00	
10		.66													
11		.65													
12		.80													
13		.81													
14		.84													
15			.30												
16								.64							
17			.70												
18			.54												.39
19	.64														
20			.43												.46
21				.52											.32
22				.71											
23				.49											.21
24	.73														
25				.43											.51
26						.42									.58
27					1.00										
28						.74									
29						.67									
30	.41					.38									
31													.75		
32						.71									
33								.51							.33
34						.50									.49
35							.69								
36							.65								.25
37							.78								
38													.64		.18
39								.75							
40								.38							.41

(Continued)

Factor Codes

1 = Training and Career Development
2 = Reward and Recognition
3 = Innovation and Risk Taking
4 = Customer Focus
5 = Leadership and Commitment to Quality
6 = Institutional Fairness
7 = Open Communication
8 = Employee Involvement
9 = Health-Enhancing Work Environment
10 = Family/Work/Life Balance
11 = Teamwork
12 = Resource Allocation/Utilization
13 = Supervision/Management
14 = Job Security and Commitment to Workforce
15 = Employee-oriented Items Method Factor

Table 14 (Continued)

Item	Factor 1	2	3	4	5	6	7	8	9	10	11	12	13	14	15
41								.78							
42								.33							.66
43								.63							
44								.46							.53
45								.42							.63
46								.78							
47												.42			
49									.73						-.13
50									.67						
51												.30			
52												.33			
53												.50			
54												.68			
55												.56			.27
56												.59			
57												.36			
58												.53			
59										.26					
60										.27					
61										.42					.51
62										.69					
63										.44					.55
64													.71		
65													.79		
66													.73		
67							.73								
68													.83		
69													.47		
70													.84		
71													.72		
72													.81		
73											.73				.20
74											.82				
75											.64				

Factor Codes

1 = Training and Career Development
2 = Reward and Recognition
3 = Innovation and Risk Taking
4 = Customer Focus
5 = Leadership and Commitment to Quality
6 = Institutional Fairness
7 = Open Communication
8 = Employee Involvement
9 = Health-Enhancing Work Environment
10 = Family/Work/Life Balance
11 = Teamwork
12 = Resource Allocation/Utilization
13 = Supervision/Management
14 = Job Security and Commitment to Workforce
15 = Employee-oriented Items Method Factor

better fit to the data, χ^2 (2453, N=4601) = 28825.55, $p<.01$, GFI = .83. The factor loadings for the final model are shown in Table 17, and the factor correlations are in Table 18.

Table 15
Items Comprising the Employee-Oriented Method Factor in the Final Model
Work Unit Experiences Scale, Nonconsortium Employee Subsample #1

Item		Method Factor λ	Substantive Construct Factor (λ before/ λ in Presence of Method Factor)*
#8	C/T employees share their knowledge with co-workers.	.28	Open Communication (.36/.39)
#9	C/T employees respond to opportunities to gain new knowledge and develop new skills.	-	Job Security and Commitment to Workforce**
#18	C/T employees adapt to new technologies and learn how to use new tools.	.39	Innovation and Risk Taking (.66/.54)
#20	C/T employees support innovation and technological changes which result in higher quality products and services.	.46	Innovation and Risk Taking (.60/.43)
#21	C/T employees have a good understanding of who they serve as customers.	.32	Customer Focus (- /.52)
#23	C/T employees use suggestions from their customers to improve the quality of products and services.	.21	Customer Focus (- /.49)
#25	C/T employees are committed to providing high quality products and services to customers.	.51	Customer Focus (- /.43)
#26	C/T employees live up to high ethical standards.	.58	Institutional Fairness (- /.42)
#33	C/T employees share responsibility for the quality of work relationships.	.33	Employee Involvement (.50/.51)
#34	C/T employees follow existing policies and practices (e.g., do not cut corners, take advantage of system).	.49	Institutional Fairness (.46/.50)
#36	C/T employees participate in honest and forthright dialogue with supervisors.	.25	Open Communication (.61/.65)
#38	C/T employees openly discuss their needs and concerns with supervisors.	.18	Supervision/Management (- /.64)
#40	C/T employees actively seek leadership roles with increased responsibility.	.41	Employee Involvement (.36/.38)
#42	C/T employees take the initiative to meet work goals and deadlines.	.66	Employee Involvement (- /.33)

(Continued)

Table 15 (Continued)

Item		Method Factor λ	Substantive Construct Factor (λ before/ λ in Presence of Method Factor)*
#44	C/T employees take responsibility for decisions that influence their work.	.53	Employee Involvement (.43/.46)
#45	C/T employees look for ways to improve the quality of products, services, and work processes.	.63	Employee Involvement (- /.42)
#49	C/T employees take personal health seriously and maintain optimum fitness for work.	-.13	Health-Enhancing Work Environment (.63/.73)
#55	C/T employees have the right mix of skills and knowledge to accomplish work goals.	.27	Resource Allocation/Utilization (- /.56)
#61	C/T employees do not allow personal activities to interfere with work (e.g., frequent absenteeism, lengthy personal phone calls).	.51	Family/Work/Life Balance (- /.42)
#63	C/T employees actively seek to balance their commitment to work and their family and personal life needs to ensure that work gets done.	.55	Family/Work/Life Balance (.51/.44)
#73	A spirit of cooperation and teamwork exists among C/T employees.	.20	Teamwork (- /.73)

* Because the nonconsortium analysis was conducted in part to replicate the final consortium measurement model, items that were also administered to the consortium sample were not analyzed without an Employee-oriented method factor, and therefore are presented with a dash (-) for a construct factor loading prior to being loaded on the method factor. Only the items unique to the nonconsortium sample are reported with construct factor loadings prior to being loaded on the method factor.

** Single indicator on a construct factor with a forced loading of 1.00 and residual of 0; therefore, could not be loaded on method factor.

Multiple Groups Analyses

The results of the significance tests for each subgroup analysis are explained below and summarized in Table 19.

Sex. The CE1 and CE2 subsamples were combined, and random samples of 1,300 males and 1,300 females were drawn. The final measurement models developed on the CE1 and cross-validated on the CE2 subsamples for the Work Unit Experiences and the Organizational Experiences items were tested for group differences in the factor loading matrix. The unconstrained simultaneous factor analysis of the Work Unit Experiences measurement model fit the data from the two groups well, GFI = .87. The model constraining the factor loading matrix to be equal across the groups likewise fit the data well, also with a goodness-of-fit

Table 16
Factor Correlations, Final Factor Model (Decimals omitted)
Work Unit Experiences Scale, Nonconsortium Employee Subsample #1

Factor	1	2	3	4	5	6	7	8	9	10	11	12	13	14	15
1	-														
2	72	-													
3	74	63	-												
4	58	50	64	-											
5	58	56	54	58	-										
6	69	71	62	58	64	-									
7	79	72	72	60	72	85	-								
8	74	74	72	62	68	78	93	-							
9	26	22	31	39	24	38	32	32	-						
10	61	62	56	43	56	74	82	82	38	-					
11	58	55	55	46	52	75	76	76	43	67	-				
12	66	54	54	46	44	64	69	64	39	64	58	-			
13	73	72	64	55	68	83	98	98	32	84	74	67	-		
14	19	19	35	29	16	26	22	22	40	15	31	21	21	-	
15	-20	-21	-07	10	-14	-05	-19	-19	63	-15	10	-07	-17	46	-

Factor Codes

1 = Training and Career Development
2 = Reward and Recognition
3 = Innovation and Risk Taking
4 = Customer Focus
5 = Leadership and Commitment to Quality
6 = Institutional Fairness
7 = Open Communication
8 = Employee Involvement
9 = Health-Enhancing Work Environment
10 = Family/Work/Life Balance
11 = Teamwork
12 = Resource Allocation/Utilization
13 = Supervision/Management
14 = Job Security and Commitment to Workforce
15 = Employee-oriented Items Method Factor

index of .87. The χ^2-difference test was nonsignificant, $\Delta\chi^2(63) = 82.05$, $p > .01$, indicating that no differences in item validity existed for the two groups (i.e., the items have similar meaning for males and females).

The unconstrained model for the Organizational Experiences items also fit the data well, GFI = .87, as did the constrained model, GFI = .87. The χ^2-difference test was significant, $\Delta\chi^2(50) = 83.06$, $.005 > p > .001$, indicating that some items may have different meaning for the two genders. Further analyses, not conducted in this study, would involve unconstraining individual items across the groups to identify those with differential validity.

Race. One thousand and three hundred whites and 1,300 African Americans were randomly sampled from the combined CE1 and CE2 subsamples. Both the Work Unit Experiences and Organizational Experiences unconstrained measurement models fit the data well (GFI = .88

Table 17
Factor Loadings, Final Factor Model
Organizational Experiences Scale, Nonconsortium Employee Subsample #1

Item	Factor 1	2	3	4	5	6	7	8	9	10	11	12	13	14
78					.72									
79	.64													
80	.59													
81	.83													
82	.63													
83													.36	
84		.61												
85		.79												
86		.88												
87		.85												
88		.61												
89		.55												
90			.38											
91			.78											
92			.79											
93				.79										
94				.77										
95				.75										
97			.67											
98				.74										
99				.75										
100					.77									
101					.64									
102					.63									
103					.67									
104											.66			
105											.38			
106											.57			
107											.44			
108											.48			
109					.62									
110											.33			
111											.57			
112											.74			
113											.47			
114											.48			
115						.72								
116											.71			
117											.60			
118						.77								

(Continued)

Factor Codes

1 = Reward and Recognition
2 = Innovation and Risk Taking
3 = Customer Focus
4 = Leadership and Commitment to Quality
5 = Institutional Fairness
6 = Open Communication
7 = Employee Involvement
8 = Health-Enhancing Work Environment
9 = Family/Work/Life Balance
10 = Teamwork = Diversity
12 = Social Responsibility
13 = Job Security and Commitment to Workforce
14 = Strategic Planning

Table 17 (Continued)

Item	Factor 1	2	3	4	5	6	7	8	9	10	11	12	13	14
119						.75								
120						.70								
121						.47								
122						.70								
123							.44							
124							.80							
125								.44						
126								.48						
127									.64					
128								.84						
129								.90						
130									.64					
131									.60					
132									.74					
133												.69		
134								.64						
135												.45		
136												.60		
137												.54		
138												.51		
139												.52		
140												.45		
141	.73													
142	.74													
143													.61	
144													.59	
145													.21	
146													.44	
147													.38	
148										.53				
149										.64				
150										.86				
154														1.00

Factor Codes

1 = Reward and Recognition
2 = Innovation and Risk Taking
3 = Customer Focus
4 = Leadership and Commitment to Quality
5 = Institutional Fairness
6 = Open Communication
7 = Employee Involvement
8 = Health-Enhancing Work Environment
9 = Family/Work/Life Balance
10 = Teamwork
11 = Diversity
12 = Social Responsibility
13 = Job Security and Commitment to Workforce
14 = Strategic Planning

and .87, respectively), as did the constrained models (also with GFI = .88 and .87). The χ^2-difference tests were significant for both groups ($\Delta\chi^2(63) = 142.96$, $p < .01$, for the Work Unit Experiences models, and $\Delta\chi^2(50) = 127.81$, $p < .01$ for the Organizational Experiences models).

Table 18
Factor Correlations, Final Factor Model (Decimals omitted)
Organizational Experiences Scale, Nonconsortium Employee Subsample #1

Factor	1	2	3	4	5	6	7	8	9	10	11	12	13	14
1	-													
2	61	-												
3	43	45	-											
4	82	68	65	-										
5	86	65	48	86	-									
6	78	65	52	89	87	-								
7	83	63	56	89	86	93	-							
8	64	58	38	67	70	69	67	-						
9	57	51	33	56	59	59	59	77	-					
10	76	59	47	78	74	80	85	59	54	-				
11	71	60	54	80	92	83	82	62	57	69	-			
12	61	55	52	65	62	67	69	70	83	62	66	-		
13	74	63	60	75	79	79	80	69	69	70	78	83	-	
14	53	46	33	57	55	60	59	47	40	60	47	44	52	-

Factor Codes

1 = Reward and Recognition
2 = Innovation and Risk Taking
3 = Customer Focus
4 = Leadership and Commitment to Quality
5 = Institutional Fairness
6 = Open Communication
7 = Employee Involvement
8 = Health-Enhancing Work Environment
9 = Family/Work/Life Balance
10 = Teamwork
11 = Diversity
12 = Social Responsibility
13 = Job Security and Commitment to Workforce
14 = Strategic Planning

Age. Subjects were categorized as older if they were at least 50 years old, and younger if they were under 50. From the combined CE1 and CE2 subsamples, 1,300 persons in each of the two age groups were randomly selected. All the unconstrained and constrained models fit the data well with a goodness-of-fit index of .87, and the χ^2-difference tests were both nonsignificant ($\Delta\chi^2(63) = 85.40$, $p > .01$, for the Work Unit Experiences models, and $\Delta\chi^2(50) = 59.98$, $p > .01$ for the Organizational Experiences models).

Cross-scales Analyses

Ten factors representing five constructs common to both the Work Unit and the Organizational Experiences scales, each specified by multiple indicators with strong factor loadings in the final measurement models, were selected for this analysis. The factors were: Reward and Recognition, Customer Focus, Institutional Fairness, Open Communication, and Teamwork. The CE2 subsample was used for this analysis. Correlated residuals specified in the final measurement models were likewise specified in this model. The model fit the data

Table 19
Results of Multiple Groups Simultaneous Factor Analyses

Groups	Measurement Model	Factor Loading Matrix		Difference
		Unconstrained	Constrained	
SEX: Males/Females	Work Unit Experiences	χ^2 = 10989.96 df = 3524	χ^2 = 11072.01 df = 3587	$\Delta\chi^2$ =82.05 Δdf = 63
	Organizational Experiences	χ^2 = 12355.53 df = 3884	χ^2 = 12438.59 df = 3934	$\Delta\chi^2$ = 83.06* Δdf = 50
RACE: Whites/African Americans	Work Unit Experiences	χ^2 = 10650.48 df = 3524	χ^2 = 10793.44 df = 3587	$\Delta\chi^2$ = 142.96* Δdf = 63
	Organizational Experiences	χ^2 = 11955.34 df = 3884	χ^2 = 12083.15 df = 3934	$\Delta\chi^2$ = 127.81* Δdf = 50
AGE: Older (> =50)/ Younger (<50)	Work Unit Experiences	χ^2 = 10776.27 df = 3524	χ^2 = 10861.67 df = 3587	$\Delta\chi^2$ = 85.40 Δdf = 63
	Organizational Experiences	χ^2 = 12701.72 df = 3884	χ^2 = 12761.70 df = 3934	$\Delta\chi^2$ = 59.98 Δdf = 50

* $p < .01$

well, χ^2 (731, N=4921) = 9353.87, p<.01, GFI = .91. Figure 3 depicts the model and includes the factor correlations both between the factors common to the two scales and between factors whose correlation was higher than that between the common factors. None of the correlations between common factors was .9 or higher, indicating that some differentiation between the scales was present in the responses (although, recall that the item composition of the common factors was different across the scales). Five of the ten factors had higher correlations with other factors than with their construct counterpart; however, in each case there was only one correlation that was higher, lending substantial support to the construct validity of the factors. In sum, the test was inconclusive, although the results suggested some differentiation among the Work Unit and Organizational Experiences scales

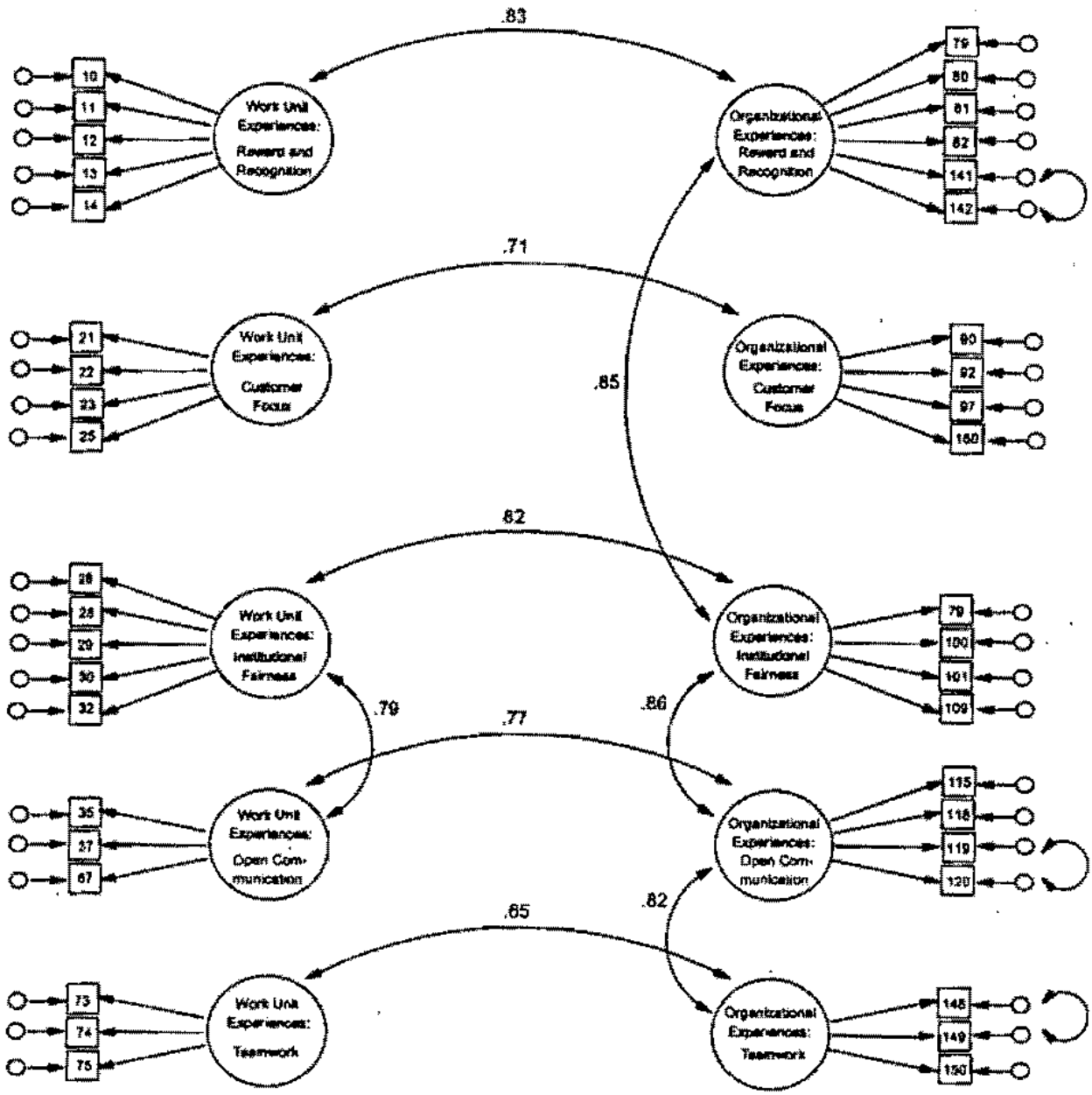

Figure 3. Cross-scales Analysis, Factor Correlations of Common Factors Across Work Unit and Organizational Experiences Scales and of Other Factors with Large Correlations

Table 20
Cross-Scales Analysis, Factor Correlations (Decimals omitted)

Factor	Factor 1	2	3	4	5	6	7	8	9	10
1	-									
2	83	-								
3	47	41	-							
4	49	58	71	-						
5	75	67	56	58	-					
6	80	85	48	62	82	-				
7	68	65	56	57	79	75	-			
8	64	73	51	67	69	86	77	-		
9	52	54	48	57	70	66	61	61	-	
10	61	74	51	70	67	78	65	82	65	-

Factor Codes

1 = Reward and Recognition (Work Unit Experiences)
2 = Reward and Recognition (Organizational Experiences)
3 = Customer Focus (Work Unit Experiences)
4 = Customer Focus (Organizational Experiences)
5 = Institutional Fairness (Work Unit Experiences)
6 = Institutional Fairness (Organizational Experiences)
7 = Open Communication (Work Unit Experiences)
8 = Open Communication (Organizational Experiences)
9 = Teamwork (Work Unit Experiences)
10 = Teamwork (Organizational Experiences)

and offered some construct validity support. The complete factor correlation matrix is shown in Table 20.

Observed Score Subscale Reliability

The factor structures of the final measurement models for the Work Unit and the Organizational Experiences scales implied item-to-dimension (subscale) assignments at the observed score level. The reliability of these subscales was assessed using Cronbach's Coefficient Alpha. These analyses were also used to finalize assignments of items for which the results of the LISREL analyses were inconclusive. Tables 21-24 show coefficient alphas for the a priori and final subscales of the Work Unit and Organizational Experiences scales on the consortium (CE2 and CS2) and nonconsortium (NCE2) samples, with some comments that explain reasons for the changes in item assignments. In a few instances, coefficient alpha for the revised subscale is lower than the a priori subscale, but as explained in the comments, this is because the LISREL analyses revealed that some of the a priori items were more valid indicators of other constructs. Recall that coefficient alpha is, in fact, not a good measure of dimension homogeneity. A subscale with a relatively large number of items that correlate moderately will have an impressive α even if some of the items are best used as

indicators of other dimensions; it was of no surprise that, after items were reassigned based on the LISREL item validity analyses, those dimensions that lost some items also lost some reliability.

Interrater Agreement

For each item, interrater agreement was calculated within agency using both Finn's (1970) equation and Usala's (1993) modification. Agency was used as the smallest unit of analysis available under the premise that agreement is most likely among raters in a similar environment. The agreements calculated within agency were then averaged to obtain a single, average interrater agreement for every item. These average agreements are listed in Appendix D. Because agency is still a rather broad context, and since there is a lack of guidance in the literature as to what an acceptable minimum agreement should be, .3 was chosen as an arbitrary criterion at which to note items with lower agreements. Eight Work Unit Experiences items and five Organizational Experiences items had an average modified agreement below this criterion, as noted in the appendix.

Table 21
Cronbach's Coefficient Alpha (α) Reliability Estimates
Work Unit Experiences Scales, Consortium Incumbents and Supervisors, Subsamples #2

Subscale	A Priori Items and α (Incumbents/ Supervisors)	Revised Items and α (Incumbents/ Supervisors)	Comments
Reward and Recognition	#10-12 α = .82 / .76	#10-14 α = .88 / .84	
Training and Career Development	#1-7 α = .88 / .84	#1-7, 19, 24 α = .89 / .84	
Innovation and Risk Taking	#14, 15, 16, 17, 19 α = .71 / .66	No Subscale	#14, 16, and 19 are more valid indicators of other dimensions; α for items 15 and 17 = .29.
Customer Focus	#21-25 α = .75 / .80	#21, 22, 23, 25 α = .72 / .77	#24 is a more valid indicator of Training and Career Development.
Leadership and Commitment to Quality	No Subscale	No Subscale	Single item #27
Institutional Fairness	#13, 26, 28-32, 72 α = .87 / .83	#26, 28- 30, 32 α = .78, .76	#13, 31, 72 are more valid indicators of other dimensions.
Open Communication	#35, 37, 67 α = .79 / .77	No Subscale	Collapsed with Supervision/ Management

(Continued)

Table 21 (Continued)

Subscale	A Priori Items and α (Incumbents/ Supervisors)	Revised Items and α (Incumbents/ Supervisors)	Comments
Employee Involvement	#39, 41-43, 45, 46 α = .77 / .83	#16, 39, 41, 43, 45, 46 α = .81 / .82	
Resource Allocation/Utilization	#47, 51-58 α = .75 / .75	No Change	
Health-Enhancing Work Environment	#48, 50 α = -.49 / -1.12	No Subscale	#48 (after being reverse-coded) correlates negatively with all the other items in the survey.
Family/Work/Life Balance	#59-62 α = .38 / .26	No Subscale	Items are not good indicators of a single dimension.
Teamwork	#73, 74, 75 α = .81 / .79	No Change	
Supervision/ Management	#38, 64-66, 68-71 α = .89 / .86	#31, 35, 37, 38, 64-72 α = .93 / .91	Collapsed Open Communication with this subscale.

Table 22

Cronbach's Coefficient Alpha (α) Reliability Estimates
Organizational Experiences Scales, Consortium Incumbents and Supervisors, Subsamples #2

Subscale	A Priori Items and α (Incumbents/ Supervisors)	Revised Items and α (Incumbents/ Supervisors)	Comments
Reward and Recognition	#79-82 α = .84 / .78	#79-82, 141, 142 α = .88 / .83	
Training and Career Development	#76, 77, 78 α = .83 / .79	#76, 77 α = .84 / .82	
Innovation and Risk Taking	#84, 88, 89 α = .65 / .63	No Change	
Customer Focus	#90, 92, 97, 160 α = .69 / .70	No Change	

(Continued)

Table 22 (Continued)

Subscale	A Priori Items and α (Incumbents/ Supervisors)	Revised Items and α (Incumbents/ Supervisors)	Comments
Leadership and Commitment to Quality	#93-96, 98, 99 α = .89 / .87	No Change	
Institutional Fairness	#100, 101 α = .67 / .59	#78, 100, 101, 109 α = .80 / .70	
Open Communication	#118, 119, 120 α = .84 / .85	#115, 118, 119, 120 α = .85 / .85	
Employee Involvement	No Subscale	No Subscale	Single item #123
Health-Enhancing Work Environment	#125, 126, 127 α = .63 / .61	#125, 126 α = .74 / .75	
Family/Work/Life Balance	#130, 131 α = .59 / .55	#127, 130, 131 α = .67 / .66	
Teamwork	#148, 149, 150 α = .78 / .76	No Change	
Diversity	#104, 105, 107-113, 115 α = .84 / .82	#104, 107, 108, 110-113 α = .81 / .80	#109 and 115 are better indicators of Institutional Fairness and Open Communication, respectively; #105 (a reverse-scored item) is simply a poor indicator.
Social Responsibility	#134-138, 140 α = .77 / .82	No Change	Kept #134 with this subscale for rational reasons despite LISREL results suggesting it is a better indicator of Family/ Work/Life Balance.
Job Security and Commitment to Workforce	#141-143, 145, 146 α = .69 / .72	No Subscale	#141 and 142 are better indicators of other dimensions. #145 was a poor indicator. α for #143 and 146 = .42.
Strategic Planning	#151, 152, 154, 155 α = .85 / .85	#151-155 α = .88 / .88	#153 was probably interpreted as an activity integral to the Strategic Planning process.
Measurement and Analysis	#153, 156-159, 161-163 α = .89 / .88	#156-159, 161-163 α = .87 / .87	#153 is a better indicator of Strategic Planning.

Table 23
Cronbach's Coefficient Alpha (α) Reliability Estimates
Work Unit Experiences Scales, Nonconsortium Incumbents, Subsample #2

Subscale	A Priori Items and α	Revised Items and α	Comments
Reward and Recognition	#10, 11, 12 α = .81	#10, 11, 12, 13, 14 α = .88	
Training and Career Development	#1-7 α = .89	#1-7, 19, 24 α = .90	
Innovation and Risk Taking	#14-20 α = .73	#17, 18, 20 α = .64	
Customer Focus	#21-25 α = .74	#21, 22, 23, 25 α = .72	
Leadership and Commitment to Quality	No Subscale	No Subscale	
Institutional Fairness	#13, 26, 28-32, 34, 72 α = .88	#26, 28, 29, 30, 32, 34 α = .81	
Open Communication	#8, 35, 36, 37, 67 α = .79	No Subscale	#35, 36, 37, and 67 collapsed with Supervision/ Management
Employee Involvement	#33, 39-46 α = .84	#16, 33, 39-41, 43-46 α = .84	
Resource Allocation/Utilization	#47, 51-58 α = .77	No Change	
Health-Enhancing Work Environment	#48, 49, 50 α = -.20	#49, 50 α = .57	
Family/Work/Life Balance	#59-62 α = .52	#61-63 α = .57	
Teamwork	#73, 74, 75 α = .80	No Change	
Supervision/ Management	#38, 64-66, 68-71 α = .90	#31, 35-38, 64-72 α = .94	Collapsed Open Communication with this subscale.

Table 24
Cronbach's Coefficient Alpha (α) Reliability Estimates
Organizational Experiences Scales, Nonconsortium Incumbents, Subsample #2

Subscale	A Priori Items and α	Revised Items and α	Comments
Reward and Recognition	#79-82 α = .85	#79-82, 141, 142 α = .88	
Training and Career Development	No Subscale	No Subscale	Single item #78 moved to Institutional Fairness.
Innovation and Risk Taking	#84-89 α = .87	No Change	
Customer Focus	#90-92, 97 α = .71	No Change	
Leadership and Commitment to Quality	#93-95, 98, 99 α = .89	No Change	
Institutional Fairness	#100-103 α = .81	#78, 100-103, 109 α = .85	
Open Communication	#118-121, 123 α = .86	#115, 118-122 α = .87	
Employee Involvement	123, 124 α = .55	No Change	
Health-Enhancing Work Environment	#125-129 α = .79	#125, 126, 128, 129 α = .77	
Family/Work/Life Balance	#130, 131, 132 α = .75	#127, 130, 131, 132 α = .76	
Teamwork	#148, 149, 150 α = .78	No Change	
Diversity	#104-113, 115-117 α = .89	#104, 106-108, 110-114, 116, 117 α = .87	
Social Responsibility	#133-140 α = .82	No Change	
Job Security and Commitment to Workforce	#83, 142-147 α = .77	143, 144, 146, 147	
Strategic Planning	No Subscale	No Subscale	Single item #154

SUMMARY AND DISCUSSION

A summary of the most important results of this study is found in Appendix E. This is a chart of the final item-to-dimension assignments based on the results of the LISREL and Cronbach's Coefficient Alpha analyses, and it serves as one source of information for guidance when using any of these items in future surveys. In addition, it lists factor loadings from the CE1 and NCE1 subsamples and reliability estimates from the CE2 and NCE2 subsamples. Items with very low interrater agreement (less than .3) are also designated. The last listing of items in the chart ("Miscellaneous Items") is of those not found to measure any of the constructs represented in the factor model, with the factor on which they were loaded in parentheses. New dimension definitions to reflect the new item-dimension configurations were not written to emphasize the point that, if subsets of these items are used in future studies, dimension definitions must be written at that time which reflect the specific items selected.

Overall, the validity of the a priori item-dimension structure for the climate items was supported. Only one dimension was lost due to poor item validities in the Work Unit Experiences scale (Oral Communication, which was collapsed with Supervision/ Management), and none of the Organizational Experiences dimensions was lost. Only nine of the 163 items are listed as having insufficient empirical support as valid indicators of the dimensions in this study. However, as can be found in Appendix E, a few others have only barely acceptable validities, and some would form subscales of insufficient reliability if used to report dimension results in these samples.

This study was conducted using sophisticated statistical tools that, in the area of climate research, are unfortunately still uncommon. As such, several points about the final results that may be somewhat confusing should be addressed. The most obvious is that, in the final arrangement of items, factor loadings and reliabilities are sometimes lower than for the a priori configuration. This is not surprising. One of the benefits of a LISREL analysis is that systematic measurement error, which can artifactually inflate factor loadings, can be removed from the factor space. This allows a better reading of the "true" meaning of an item, which in turn allows a more accurate item-to-factor assignment. The initial factor loadings were not disattenuated for systematic error. Also, as items were unloaded from some factors and loaded onto others, the factor loadings of other items were affected as factor compositions changed. Finally, as item-to-dimension assignments were changed, some coefficients alphas, which are partially dependent upon the number of items in a subscale, decreased as dimensions lost items. The overall purpose of the analyses was to find the best item-to-dimension assignments given the item pool of the surveys, not to maximize all factor loadings and coefficient alphas. There would undoubtedly be some lowering of loadings and reliabilities, but on balance, the improvements in the measurement models yield more accurate item scoring at the dimension level.

Another source of confusion will probably be in the interpretation of the results for the method factor items. For instance, some of Miscellaneous items in Appendix E are reverse-coded items with seemingly adequate factor loadings on their construct factors. However, recall that these loadings were obtained in the presence of a method factor for reverse

scoring which removed systematic error from the construct factor space, revealing true factor loadings of adequate size. Because systematic error is not removed in an observed score, these items were placed in the miscellaneous category based on their factor loadings prior to introducing the method factor. Overall, the reverse-scored items proved to be poor indicators. This is not necessarily a condemnation of reverse-scored items in general. It could be that the reversed nature of these particular items was not obvious to respondents, and so they were not as thoughtful when responding to them as one would expect for items whose reversed wording is more prominently displayed.

In contrast to the reverse-scored items, factor loadings for employee-oriented items generally decreased when that method factor was introduced. However, this likewise suggested a substantial role of systematic error variance. Consequently, each employee-oriented item should be evaluated separately in the context of their factor loadings prior to and in the presence of this method factor; in general, though, employee-oriented items with high factor loadings in Appendix E are strong items.

Interrater agreements were calculated for information pertaining to the theoretical premise that climate identification requires agreement among raters as to what the climate is for a particular environment. Again, this is a condition that is stated in the literature but often overlooked in practice, and therefore there is not much historical material with which to interpret the current findings. The interrater agreement results of the present study should therefore be treated with caution and as a step in the direction of introducing agreement as a standard analysis in this context. Besides the determination of what is an acceptable, minimum agreement criterion, probably the most difficult decision regarding interrater agreement involves the level of analysis for calculating it. In this study, agreement was calculated only at the item level to provide information for future survey work on the agreement that each of these items received in this particular instance. However, agreement would be an important condition for whatever level climate scores are to be reported, be it at the item or dimension level. The difficulty arises when considering what to do with items that have poor interrater agreement. Such items may be quite valid as indicators of a climate construct while their results by themselves may not reflect an identifiable climate. Should items whose stand-alone results cannot be reported due to inadequate interrater agreement still be used to calculate a dimension score if they contribute substantial valid variance, given that the dimension score should also then be assessed for agreement? If both item and dimension scores are to be reported in a study, the researcher may not want to retain such items for dimension scoring because it might be confusing to have a dimension score based on a different item composition than the items listed elsewhere in the report as measuring that construct. However, if only dimension scores are reported, there may be no psychometric reason for excluding such items. While the context of a study is one determining element, further study on the psychometric implications of this problem is needed.

This study raised other questions that at this time remain unanswered. These include an investigation into the significant differences in the factor loading matrices of the measurement models for the gender and race subgroups. By isolating factor loadings suspected of being the source of the statistical significance, and freeing these parameters across the subgroups one by one, items that mean different things to different populations can be identified.

Perhaps an item ostensibly about compensating performance is most meaningful to one subgroup as a reward issue but to another as one of fairness. It might be important to (1) understand such differences in meaning and address them, and/or (2) insure that only items that have consistent meaning are reported so that results can be interpreted consistently for persons of all subgroups. The assessment of measurement equivalence can be pursued much further than was done in the present study. Optimally, researchers would make such assessments for sex, race, and age standard practice whenever practical and feasible.

Other unanswered questions pertain, again, to the question of method variance. It was interesting that the Employee-oriented factor was only evident in the measurement model for the Work Unit Experiences scale, and not the Organizational Experiences scale. This could be attributed simply to the Organizational Experiences items being less subject to response variance based on their orientation. Understanding why this would be so could be valuable. Also, the Reversed-score method factor found in the consortium sample was not apparent in the nonconsortium sample. This is another unsolved mystery worth further research.

While this study outlined a procedure for using state-of-the-art analyses to conduct item analysis, the immediate value of the results is in what they suggest for using these items in future surveys, and for writing new items. Appendix E provides useful information on each item regarding what dimensions they measure and how well. However, there is other information in the study to be considered. The tables showing which items had correlated measurement error should be studied for clues as to what wording structure to avoid. The reverse-scored items in this study are probably also poorly structured and should be revised to make the reversed nature more prominent, or dropped altogether. Some items were more susceptible to response variance due to their (employee) orientation than others, and the tables reporting their factor loadings should be studied for clues to successful item writing. Also, the table reporting assignment changes showed that items obviously referencing multiple constructs do not always measure what was intended; such wording should be avoided.

Finally, some drawbacks to conducting in-depth analyses such as these are evident. The analyses can be labor and time intensive. In many instances, they raise more questions than they answer, and the amount of information obtained is so plentiful that information overload is inevitable. The present study only scratched the surface in evaluating all the information obtained on each item. However, it should also be obvious that the identification of items whose assignments need to be adjusted, the isolation of method variance, and the testing of item validity differences in subgroups, are extremely valuable, as are other related analyses not conducted in this study, and the procedure outlined here is an excellent way to investigate these phenomena.

REFERENCES

Career Entry Group, Office of Personnel Research and Development (1993). *Enhancing OPM's internal management*. Washington, DC: U.S. Office of Personnel Management, Career Entry Group, Office of Personnel Research and Development.

Federal Quality Institute (1993). *Presidential Award for Quality; 1994 Application*. Washington, DC: Author.

Green, S.B., Lissitz, R.W., & Mulaik, S.A. (1977). Limitations of coefficient alpha as an index of test dimensionality. *Educational and Psychological Measurement, 37*, 827-838.

Healthy Companies (1992). *Pathways to organizational health: A new program to transform the way we organize, lead, and accomplish work in America*. (Draft). Washington, DC: Author.

James, L.R., Demaree, R.G., & Wolf, G. (1984). Estimating within-group interrater reliability with and without response bias. *Journal of Applied Psychology, 69*, 85-98.

Jöreskog, K.G., & Sörbom, D. (1993). *LISREL 8 user's reference guide*. Chicago, IL: Scientific Software International, Inc.

Kozlowski, S.W.J., & Hattrup, K. (1992). A disagreement about within-group agreement: Disentangling issues of consistency versus consensus. *Journal of Applied Psychology, 77*, 161-167.

Mulaik, S.A., (1975). Confirmatory factor analysis. In D.J. Amick and H.J. Walberg (Eds.), *Introductory multivariate analysis* (pp. 170-207). Berkeley: McCutcham.

Rodriguez, D., Usala, P., & Shoun, S. (1995). *Occupational analysis of Federal clerical and technical occupations: An application of the Multipurpose Occupational Systems Analysis Inventory -- Closed-Ended (MOSAIC)* (Report No. 95-08). Washington, DC: U.S. Office of Personnel Management, Employment Service, Personnel Resources and Development Center.

Schmidt, F.L., & Hunter, J.E. (1989). Interrater reliability coefficients cannot be computed when only one stimulus is rated. *Journal of Applied Psychology, 74*, 368-370.

Schneider, J. (1993). *Organizational process dimensions underlying effective organizations: Dimensions to include in OPM's organizational assessment survey* (Report No. 94-3). Washington, DC: U.S. Office of Personnel Management, Personnel Research and Development Center.

Usala, P.D. (1993). r_{wo}: A modification of Finn's (1970) equation for calculating interrater agreement. Unpublished manuscript.

Usala, P.D., & Hertzog, C. (1989). Measurement of affective states in adults. *Research on aging, 11*, 403-426.

Appendix A

Master List of Items

Appendix A
Master List of Items

1	WU 1	CS 1	CE 1	NCE 1	.			C/T employees receive the formal training they need to perform their jobs effectively (e.g., on-the-job training, conferences, workshops).
2	WU 2	CS 2	CE 2	NCE 2	.			C/T employees receive the everyday guidance and assistance they need to perform their jobs effectively (e.g., help from supervisors or co-workers).
3	WU 3	CS 3	CE 3	NCE 3	.			C/T employees are provided with frequent opportunities to learn, update, and expand their knowledge and skills.
4	WU 4	CS 4	CE 4	NCE 4	.			C/T employees have access to manuals and other written materials that help them perform their jobs effectively.
5	WU 5	CS 5	CE 5	NCE 5	.			New C/T employees are provided with adequate orientation information to perform their jobs (e.g., through formal orientation programs, informal communication, reading materials).
6	WU 6	CS 6	CE 6	NCE 6	.			Supervisors are aware of C/T employees' training needs and help them meet these needs (e.g., send C/T employees to appropriate training courses, provide assistance, coaching).
7	WU 7	CS 7	CE 7	NCE 7	.			C/T employees are provided with training that enhances their career development and their advancement opportunities (e.g., through cross-training, detail assignments).
8	WU 8	CS .	CE .	NCE 8	.			C/T employees share their knowledge with co-workers.
9	WU 9	CS .	CE .	NCE 9	.			C/T employees respond to opportunities to gain new knowledge and develop new skills.
10	WU 10	CS 8	CE 8	NCE 10	.			High performing C/T employees are rewarded with more challenging and rewarding work.
11	WU 11	CS 9	CE 9	NCE 11	.			High performing C/T employees are promoted.
12	WU 12	CS 10	CE 10	NCE 12	.			C/T employees are rewarded for providing high quality products and services to customers.
13	WU 13	CS 11	CE 11	NCE 13	.			Supervisors are fair in rewarding C/T employee contributions.
14	WU 14	CS 12	CE 12	NCE 14	.			C/T employees are rewarded for showing creativity and innovation.
15	WU 15	CS 13	CE 13	NCE 15	R			C/T employees find it difficult to change the way things are done.
16	WU 16	CS 14	CE 14	NCE 16	.			C/T employees are encouraged to come up with new and better ways of doing things.
17	WU 17	CS 15	CE 15	NCE 17	.			C/T employees are encouraged to stay current and informed about new office technology (e.g., computers, FAX machines).
18	WU 18	CS .	CE .	NCE 18	.			C/T employees adapt to new technologies and learn how to use new tools.
19	WU 19	CS 16	CE 16	NCE 19	.			C/T employees receive training when new technologies and tools are introduced.
20	WU 20	CS .	CE .	NCE 20	.			C/T employees support innovation and technological changes which result in higher quality products and services.
21	WU 21	CS 17	CE 17	NCE 21	.			C/T employees have a good understanding of who they serve as customers.
22	WU 22	CS 18	CE 18	NCE 22	.			C/T employees receive information about their customers' requirements and expectations through a variety of effective methods.
23	WU 23	CS 19	CE 19	NCE 23	.			C/T employees use suggestions from their customers to improve the quality of products and services.
24	WU 24	CS 20	CE 20	NCE 24	.			C/T employees receive training and guidance in providing high quality products and services to customers.
25	WU 25	CS 21	CE 21	NCE 25	.			C/T employees are committed to providing high quality products and services to customers.
26	WU 26	CS 22	CE 22	NCE 26	.			C/T employees live up to high ethical standards.
27	WU 27	CS 23	CE 23	NCE 27	.			Supervisors let C/T employees know how their work contributes to the organization's mission and goals.
28	WU 28	CS 24	CE 24	NCE 28	.			Discipline is administered fairly to C/T employees.
29	WU 29	CS 25	CE 25	NCE 29	.			The distribution of work among C/T employees is evenly balanced.
30	WU 30	CS 26	CE 26	NCE 30	.			Decisions about training and career development opportunities (e.g., job assignments) for C/T employees are fair.
31	WU 31	CS 27	CE 27	NCE 31	.			Supervisors treat C/T employees with respect.
32	WU 32	CS 28	CE 28	NCE 32	.			Disputes or conflicts (e.g., between co-workers) are quickly and fairly resolved.
33	WU 33	CS .	CE .	NCE 33	.			C/T employees share responsibility for the quality of work relationships.
34	WU 34	CS .	CE .	NCE 34	.			C/T employees follow existing policies and practices (e.g., do not cut corners, take advantage of system).
35	WU 35	CS 29	CE 29	NCE 35	.			C/T employees are kept well informed on all issues affecting their job.
36	WU 36	CS .	CE .	NCE 36	.			C/T employees participate in honest and forthright dialogue with supervisors.
37	WU 37	CS 30	CE 30	NCE 37	.			Information flows freely from supervisors to C/T employees.
38	WU 38	CS 31	CE 31	NCE 38	.			C/T employees openly discuss their needs and concerns with supervisors.
39	WU 39	CS 32	CE 32	NCE 39	.			Managers provide C/T employees with the opportunity to demonstrate their leadership skills.
40	WU 40	CS .	CE .	NCE 40	.			C/T employees actively seek leadership roles with increased responsibility.

(Continued)

WU = Work Unit Experiences scale; DE = Organizational Experiences scale; CS = Consortium supervisor sample; CE = Consortium employee sample; NCE = Non-consortium employee sample; R = Item is reverse-scored. The number at the far left is a master item number code corresponding to the relative item order in the surveys. The number to the right of the scale designation (WU and OE) is a within-scale item number record. The numbers following each sample code (CS, CE, and NCE) is the climate item number within that sample's survey. A dot (.) to the right of a sample code indicates that item was not given to that sample.

41	WU 41	CS	33	CE	33	NCE 41		.	Supervisors fully involve C/T employees in the design of their work.
42	WU 42	CS	34	CE	34	NCE 42		.	C/T employees take the initiative to meet work goals and deadlines.
43	WU 43	CS	35	CE	35	NCE 43		.	C/T employees are encouraged to identify and solve problems.
44	WU 44	CS	.	CE	.	NCE 44		.	C/T employees take responsibility for decisions that influence their work.
45	WU 45	CS	36	CE	36	NCE 45		.	C/T employees look for ways to improve the quality of products, services, and work processes.
46	WU 46	CS	37	CE	37	NCE 46		.	Supervisors ask for C/T employee ideas and opinions before making important work unit decisions.
47	WU 47	CS	38	CE	38	NCE 47		.	C/T employees have enough work space to do their work.
48	WU 48	CS	39	CE	39	NCE 48	R		C/T employees feel work-related stress.
49	WU 49	CS	.	CE	.	NCE 49		.	C/T employees take personal health seriously and maintain optimum fitness for work.
50	WU 50	CS	40	CE	40	NCE 50		.	C/T employees observe safety rules.
51	WU 51	CS	41	CE	41	NCE 51	R		Interruptions make it difficult for C/T employees to finish their work on time.
52	WU 52	CS	42	CE	42	NCE 52	R		Having to get approval from others slows down C/T employees' work.
53	WU 53	CS	43	CE	43	NCE 53		.	C/T employees have the appropriate supplies, materials, and equipment to perform their jobs well.
54	WU 54	CS	44	CE	44	NCE 54		.	C/T employees are given reasonable goals and standards to meet.
55	WU 55	CS	45	CE	45	NCE 55		.	C/T employees have the right mix of skills and knowledge to accomplish work goals.
56	WU 56	CS	46	CE	46	NCE 56		.	Work is planned so that it can be accomplished during scheduled work hours.
57	WU 57	CS	47	CE	47	NCE 57	R		The amount of work keeps C/T employees from providing high quality products and services.
58	WU 58	CS	48	CE	48	NCE 58		.	There is enough time for C/T employees to do their jobs in a professional manner.
59	WU 59	CS	49	CE	49	NCE 59		.	C/T employees are given the opportunity to work on flexible work schedules, when the job permits (e.g., Flexitime, Alternative Work Schedule, part-time employment).
60	WU 60	CS	50	CE	50	NCE 60		.	C/T employees are given the opportunity to work at home, when the job permits (e.g., Flexiplace, work-at-home).
61	WU 61	CS	51	CE	51	NCE 61		.	C/T employees do not allow personal activities to interfere with work (e.g., frequent absenteeism, lengthy personal phone calls).
62	WU 62	CS	52	CE	52	NCE 62		.	Supervisors understand and support C/T employees' family and personal life responsibilities.
63	WU 63	CS	.	CE	.	NCE 63		.	C/T employees actively seek to balance their commitment to work and their family and personal life needs to ensure that work gets done.
64	WU 64	CS	53	CE	53	NCE 64		.	Supervisors provide fair and accurate ratings of C/T employee performance.
65	WU 65	CS	54	CE	54	NCE 65		.	Supervisors provide C/T employees with constructive suggestions to improve their job performance.
66	WU 66	CS	55	CE	55	NCE 66		.	Supervisors clearly communicate what is expected of C/T employees in terms of job performance (e.g., task responsibilities, performance standards).
67	WU 67	CS	56	CE	56	NCE 67		.	Supervisors clearly communicate to C/T employees the goals and priorities of the work unit.
68	WU 68	CS	57	CE	57	NCE 68		.	Supervisors take the time to improve the job performance of C/T employees.
69	WU 69	CS	58	CE	58	NCE 69		.	Supervisors set high standards of performance for C/T employees.
70	WU 70	CS	59	CE	59	NCE 70		.	Supervisors build C/T employees' self-confidence.
71	WU 71	CS	60	CE	60	NCE 71		.	C/T employees receive help from their supervisors when there is a work-related problem.
72	WU 72	CS	61	CE	61	NCE 72		.	There is trust between C/T employees and their supervisors.
73	WU 73	CS	62	CE	62	NCE 73		.	A spirit of cooperation and teamwork exists among C/T employees.
74	WU 74	CS	63	CE	63	NCE 74		.	A spirit of cooperation and teamwork exists among all employees in the work unit (e.g., C/T employees, professional employees, supervisors).
75	WU 75	CS	64	CE	64	NCE 75		.	C/T employees participate in teams to accomplish work unit goals.
76	OE 1	CS	65	CE	65	NCE .		.	The effectiveness of education and training programs are evaluated and improved on a continuing basis.
77	OE 2	CS	66	CE	66	NCE .		.	Individual training plans are fully integrated into the organization's overall strategy and planning for quality.
78	OE 3	CS	67	CE	67	NCE 76		.	Supervisors and managers serve as coaches and mentors to help C/T employees advance in their careers.
79	OE 4	CS	68	CE	68	NCE 77		.	High performing C/T employees receive monetary rewards (e.g., cash awards, bonuses, quality step increases).
80	OE 5	CS	69	CE	69	NCE 78		.	High performing C/T employees receive non-monetary rewards (e. g., plaques, letters of appreciation).
81	OE 6	CS	70	CE	70	NCE 79		.	Managers recognize and give credit for the full contributions of C/T employees.
82	OE 7	CS	71	CE	71	NCE 80		.	High performing C/T employees are publicly recognized (e.g., organization-wide award ceremony, recognition in newsletter).

(Continued)

WU = Work Unit Experiences scale; OE = Organizational Experiences scale; CS = Consortium supervisor sample; CE = Consortium employee sample; NCE = Non-consortium employee sample; R = Item is reverse-scored. The number at the far left is a master item number code corresponding to the relative item order in the surveys. The number to the right of the scale designation (WU and OE) is a within-scale item number record. The numbers following each sample code (CS, CE, and NCE) is the climate item number within that sample's survey. A dot (.) to the right of a sample code indicates that item was not given to that sample.

83	OE	8	CS	.	CE	.	NCE	81	.	C/T employees give full value in their contribution to the organization (e.g., work at 100% capacity).
84	OE	9	CS	72	CE	72	NCE	82	.	There is an investment in technologies (e.g., computers, FAX machines) that make C/T employees' work more efficient and easy to perform.
85	OE	10	CS	.	CE	.	NCE	83	.	New technologies that provide safe and ergonomically sound (physically supportive) work conditions are sought out and used.
86	OE	11	CS	.	CE	.	NCE	84	.	New technologies that enhance C/T employee capabilities are sought out and used.
87	OE	12	CS	.	CE	.	NCE	85	.	New technologies that makes C/T employees' work more enjoyable and satisfying are sought out and used.
88	OE	13	CS	73	CE	73	NCE	86	.	C/T employees are asked to provide input about the types of technologies that would make their work more efficient and easy to perform.
89	OE	14	CS	74	CE	74	NCE	87	.	Managers are receptive to change (e.g., new ways of doing work, structuring the organization).
90	OE	15	CS	75	CE	75	NCE	88	.	Customers have the opportunity to formally evaluate the quality of products and services provided by C/T employees (e.g., customer satisfaction surveys).
91	OE	16	CS	.	CE	.	NCE	89	.	There is a strong focus on the customer.
92	OE	17	CS	76	CE	76	NCE	90	.	There is a commitment to providing high-quality, ethically sound products and services.
93	OE	18	CS	77	CE	77	NCE	91	.	Managers inspire C/T employee to take pride in their work.
94	OE	19	CS	78	CE	78	NCE	92	.	Managers ask C/T employees about ways to improve the work produced.
95	OE	20	CS	79	CE	79	NCE	93	.	Managers follow up on C/T employee suggestions for improvements in products, services, and work processes.
96	OE	21	CS	80	CE	80	NCE	.	.	Managers provide the resources (e.g., time, training, dollars) needed to improve the quality of products and services provided to customers.
97	OE	22	CS	81	CE	81	NCE	94	.	The goal is to exceed customer expectations.
98	OE	23	CS	82	CE	82	NCE	95	.	Managers communicate the organization's vision, goals, and values related to quality and high performance.
99	OE	24	CS	83	CE	83	NCE	96	.	Managers demonstrate that quality is important in their day-to-day activities (e.g., hold meetings to discuss quality issues, interact with customers).
100	OE	25	CS	84	CE	84	NCE	97	.	An atmosphere of trust exists between managers and C/T employees.
101	OE	26	CS	85	CE	85	NCE	98	.	The promotion system is fair.
102	OE	27	CS	.	CE	.	NCE	99	.	C/T employee rights to privacy are protected.
103	OE	28	CS	.	CE	.	NCE	100	.	C/T employee rights to dissent are protected.
104	OE	29	CS	86	CE	86	NCE	101	.	Differences among C/T employees (e.g., sex, race, national origin, age, cultural background) are appreciated.
105	OE	30	CS	87	CE	87	NCE	102	R	Managers ignore minor acts of sexual harassment.
106	OE	31	CS	.	CE	.	NCE	103	.	Managers see diversity as a source of stimulation and enrichment.
107	OE	32	CS	88	CE	88	NCE	104	.	Persons with disabilities are accepted and feel part of the organization.
108	OE	33	CS	89	CE	89	NCE	105	.	C/T employees value the racial and cultural differences of others.
109	OE	34	CS	90	CE	90	NCE	106	.	Advancement opportunities are available for top qualified C/T employees, regardless of sex, race, national origin, cultural background, or disability.
110	OE	35	CS	91	CE	91	NCE	107	.	Accommodations are made for persons with disabilities (e.g., availability of sign language interpreters, ramps, braille).
111	OE	36	CS	92	CE	92	NCE	108	.	Personnel policies promote diversity in the workplace (e.g., recruiting minorities and women, training in awareness of diversity issues, mentoring).
112	OE	37	CS	93	CE	93	NCE	109	.	Supervisors and managers act to eliminate prejudice and discrimination. [NCE; CS CE NCE, CE in the workplace].
113	OE	38	CS	94	CE	94	NCE	110	.	C/T Employees treat each other with courtesy and respect.
114	OE	39	CS	.	CE	.	NCE	111	.	C/T employees feel responsible for preventing discrimination in the workplace.
115	OE	40	CS	95	CE	95	NCE	112	.	Managers encourage C/T employees to express their own preferences, beliefs, and opinions.
116	OE	41	CS	.	CE	.	NCE	113	.	Managers nurture self-expression and promote tolerance.
117	OE	42	CS	.	CE	.	NCE	114	.	There are policies and practices that assure equality of employment and opportunity.
118	OE	43	CS	96	CE	96	NCE	115	.	Managers promote effective communication between different work units (e.g., about projects, goals, needed resources).
119	OE	44	CS	97	CE	97	NCE	116	.	Managers openly communicate about the organization's conditions, operations, and choices it faces.
120	OE	45	CS	98	CE	98	NCE	117	.	Managers openly communicate about the organization's future plans.
121	OE	46	CS	.	CE	.	NCE	118	.	C/T employees respect the confidentiality of organizational information that is shared by managers.
122	OE	47	CS	.	CE	.	NCE	119	.	Information sharing occurs at all levels of the organization.
123	OE	48	CS	99	CE	99	NCE	120	.	C/T employees actively seek opportunities to contribute ideas and suggestions to managers.
124	OE	49	CS	.	CE	.	NCE	121	.	Supervisors and managers recognize the value of C/T employee participation in achieving the goals of the organization.

(Continued)

WU = Work Unit Experiences scale; OE = Organizational Experiences scale; CS = Consortium supervisor sample; CE = Consortium employee sample; NCE = Non-consortium employee sample; R = Item is reverse-scored. The number at the far left is a master item number code corresponding to the relative item order in the surveys. The number to the right of the scale designation (WU and OE) is a within-scale item number record. The numbers following each sample code (CS, CE, and NCE) is the climate item number within that sample's survey. A dot (.) to the right of a sample code indicates that item was not given to that sample.

125	OE	50	CS	100	CE	100	NCE	122	.	Physical conditions (e.g., noise, temperature, lighting, cleanliness) make it easy for C/T employees to perform their jobs well.
126	OE	51	CS	101	CE	101	NCE	123	.	C/T employees are protected from health and safety hazards on the job.
127	OE	52	CS	102	CE	102	NCE	124	.	Programs that encourage good health practices are promoted (e.g., fitness centers, health education programs).
128	OE	53	CS	.	CE	.	NCE	125	.	Managers work to promote physical health in the workplace.
129	OE	54	CS	.	CE	.	NCE	126	.	Managers work to promote psychological health in the workplace.
130	OE	55	CS	103	CE	103	NCE	127	.	Programs that help C/T employees deal with work and family responsibilities are provided (e.g., employee assistance programs, support groups, stress management courses).
131	OE	56	CS	104	CE	104	NCE	128	.	Family-related benefits are available to C/T employees (e.g., parental leave policies, on-site child care, elder care).
132	OE	57	CS	.	CE	.	NCE	129	.	There are policies and practices that help employees balance their work, family, and personal life needs.
133	OE	58	CS	.	CE	.	NCE	130	.	There is a commitment to providing benefits to the social well-being of the community and nation.
134	OE	59	CS	105	CE	105	NCE	131	.	There is an organizational commitment to improving community life (e.g., partnerships with schools).
135	OE	60	CS	106	CE	106	NCE	132	.	Managers encourage C/T employees to participate in charity campaigns sponsored by the organization (e.g., Combined Federal Campaign, holiday food drives).
136	OE	61	CS	107	CE	107	NCE	133	.	C/T employees who volunteer for community activities outside of work are supported and rewarded.
137	OE	62	CS	108	CE	108	NCE	134	.	There are policies and practices that reflect a commitment to preserving and restoring environmental health (e.g., recycling, pollution control).
138	OE	63	CS	109	CE	109	NCE	135	.	C/T employees assist the organization in meeting its commitment to preserving and restoring environmental health (e.g., participate in recycling).
139	OE	64	CS	.	CE	.	NCE	136	.	C/T employees share public responsibilities as active citizens.
140	OE	65	CS	110	CE	110	NCE	137	.	C/T employees volunteer for community service and charity campaigns outside of work (e.g., Special Olympics, American Cancer Society).
141	OE	66	CS	111	CE	111	NCE	138	.	C/T employees are rewarded for having the skills to perform many different work roles.
142	OE	67	CS	112	CE	112	NCE	139	.	C/T employees are rewarded for being knowledgeable about several areas/functions of the organization.
143	OE	68	CS	113	CE	113	NCE	140	.	Programs that help C/T employees deal with reductions in force are promoted (e.g., retraining, career counseling, aid in finding new jobs).
144	OE	69	CS	.	CE	.	NCE	141	.	It is recognized that the economic security of the organization and that of its workforce are one and the same.
145	OE	70	CS	114	CE	114	NCE	142	.	C/T employees are willing to be retrained and moved to other positions in the organization to protect their employment security.
146	OE	71	CS	115	CE	115	NCE	143	.	C/T employees are provided with job security.
147	OE	72	CS	.	CE	.	NCE	144	.	C/T employees recognize that their individual job security is linked to the long-term success of the organization.
148	OE	73	CS	116	CE	116	NCE	145	.	Different work units cooperate to get the job done.
149	OE	74	CS	117	CE	117	NCE	146	.	C/T employees in different work units participate in cross-unit teams to improve the quality of products and services, and to solve problems.
150	OE	75	CS	118	CE	118	NCE	147	.	Supervisors and managers recognize the contributions of teams.
151	OE	76	CS	119	CE	119	NCE	.	.	Managers plan for the organization's future.
152	OE	77	CS	120	CE	120	NCE	.	.	Managers set long-term quality improvement goals and objectives.
153	OE	78	CS	121	CE	121	NCE	.	.	Managers regularly review the organization's progress toward meeting its goals and objectives.
154	OE	79	CS	122	CE	122	NCE	148	.	C/T employees participate in planning for the organization's future (e.g., strategic plans, goals).
155	OE	80	CS	123	CE	123	NCE	.	.	Managers develop and use strategies that continually adapt to the changing world.
156	OE	81	CS	124	CE	124	NCE	.	.	Information on quality and timeliness are collected on all products and services from customers.
157	OE	82	CS	125	CE	125	NCE	.	.	Formal attempts are made to measure the extent to which the organization is meeting its goals and objectives.
158	OE	83	CS	126	CE	126	NCE	.	.	The quality of products and services provided to customers is compared to the performance of other organizations that are recognized as successful.
159	OE	84	CS	127	CE	127	NCE	.	.	Appropriate advanced technology and tools are used in all work processes and in information collection.
160	OE	85	CS	128	CE	128	NCE	.	.	Products, services, and work processes are designed to meet or exceed customer needs and expectations.
161	OE	86	CS	129	CE	129	NCE	.	.	Comprehensive assessments of quality, quality systems and quality processes are performed at regular intervals across the organization.
162	OE	87	CS	130	CE	130	NCE	.	.	Findings from the quality assessment process are used to improve quality and prevent problems.
163	OE	88	CS	131	CE	131	NCE	.	.	Quality is the key factor used in selecting suppliers.

WU = Work Unit Experiences scale; OE = Organizational Experiences scale; CS = Consortium supervisor sample; CE = Consortium employee sample; NCE = Non-consortium employee sample; R = Item is reverse-scored. The number at the far left is a master item number code corresponding to the relative item order in the surveys. The number to the right of the scale designation (WU and OE) is a within-scale item number record. The numbers following each sample code (CS, CE, and NCE) is the climate item number within that sample's survey. A dot (.) to the right of a sample code indicates that item was not given to that sample.

Appendix B

A Priori Item-to-Dimension Designations

Appendix B
A Priori Item-to-Dimension Designations

Work Unit Experiences

Training and Career Development

1	CS	1	CE	1	NCE	1	.	C/T employees receive the formal training they need to perform their jobs effectively (e.g., on-the-job training, conferences, workshops).
2	CS	2	CE	2	NCE	2	.	C/T employees receive the everyday guidance and assistance they need to perform their jobs effectively (e.g., help from supervisors or co-workers).
3	CS	3	CE	3	NCE	3	.	C/T employees are provided with frequent opportunities to learn, update, and expand their knowledge and skills.
4	CS	4	CE	4	NCE	4	.	C/T employees have access to manuals and other written materials that help them perform their jobs effectively.
5	CS	5	CE	5	NCE	5	.	New C/T employees are provided with adequate orientation information to perform their jobs (e.g., through formal orientation programs, informal communication, reading materials).
6	CS	6	CE	6	NCE	6	.	Supervisors are aware of C/T employees' training needs and help them meet these needs (e.g., send C/T employees to appropriate training courses, provide assistance, coaching).
7	CS	7	CE	7	NCE	7	.	C/T employees are provided with training that enhances their career development and their advancement opportunities (e.g., through cross-training, detail assignments).

Reward and Recognition

10	CS	8	CE	8	NCE	10	.	High performing C/T employees are rewarded with more challenging and rewarding work.
11	CS	9	CE	9	NCE	11	.	High performing C/T employees are promoted.
12	CS	10	CE	10	NCE	12	.	C/T employees are rewarded for providing high quality products and services to customers.

Innovation and Risk-Taking

14	CS	12	CE	12	NCE	14	.	C/T employees are rewarded for showing creativity and innovation.
15	CS	13	CE	13	NCE	15	R	C/T employees find it difficult to change the way things are done.
16	CS	14	CE	14	NCE	16	.	C/T employees are encouraged to come up with new and better ways of doing things.
17	CS	15	CE	15	NCE	17	.	C/T employees are encouraged to stay current and informed about new office technology (e.g., computers, FAX machines).
18	CS	.	CE	.	NCE	18	.	C/T employees adapt to new technologies and learn how to use new tools.
19	CS	16	CE	16	NCE	19	.	C/T employees receive training when new technologies and tools are introduced.
20	CS	.	CE	.	NCE	20	.	C/T employees support innovation and technological changes which result in higher quality products and services.

Customer Focus

21	CS	17	CE	17	NCE	21	.	C/T employees have a good understanding of who they serve as customers.
22	CS	18	CE	18	NCE	22	.	C/T employees receive information about their customers' requirements and expectations through a variety of effective methods.
23	CS	19	CE	19	NCE	23	.	C/T employees use suggestions from their customers to improve the quality of products and services.
24	CS	20	CE	20	NCE	24	.	C/T employees receive training and guidance in providing high quality products and services to customers.
25	CS	21	CE	21	NCE	25	.	C/T employees are committed to providing high quality products and services to customers.

Leadership and Commitment to Quality

27	CS	23	CE	23	NCE	27	.	Supervisors let C/T employees know how their work contributes to the organization's mission and goals.

(Continued)

CS = Consortium supervisor sample; CE = Consortium employee sample; NCE = Non-consortium employee sample; R = Item is reverse-scored. The number at the far left is a master item number code corresponding to the relative item order in the surveys. The numbers following each sample code (CS, CE, and NCE) is the climate item number within that sample's survey. A dot (.) to the right of a sample code indicates that item was not given to that sample.

Institutional Fairness

13	CS	11	CE	11	NCE	13	.	Supervisors are fair in rewarding C/T employee contributions.
26	CS	22	CE	22	NCE	26	.	C/T employees live up to high ethical standards.
28	CS	24	CE	24	NCE	28	.	Discipline is administered fairly to C/T employees.
29	CS	25	CE	25	NCE	29	.	The distribution of work among C/T employees is evenly balanced.
30	CS	26	CE	26	NCE	30	.	Decisions about training and career development opportunities (e.g., job assignments) for C/T employees are fair.
31	CS	27	CE	27	NCE	31	.	Supervisors treat C/T employees with respect.
32	CS	28	CE	28	NCE	32	.	Disputes or conflicts (e.g., between co-workers) are quickly and fairly resolved.
34	CS	.	CE	.	NCE	34	.	C/T employees follow existing policies and practices (e.g., do not cut corners, take advantage of system).
72	CS	61	CE	61	NCE	72	.	There is trust between C/T employees and their supervisors.

Open Communication

8	CS	.	CE	.	NCE	8	.	C/T employees share their knowledge with co-workers.
35	CS	29	CE	29	NCE	35	.	C/T employees are kept well informed on all issues affecting their job.
36	CS	.	CE	.	NCE	36	.	C/T employees participate in honest and forthright dialogue with supervisors.
37	CS	30	CE	30	NCE	37	.	Information flows freely from supervisors to C/T employees.
67	CS	56	CE	56	NCE	67	.	Supervisors clearly communicate to C/T employees the goals and priorities of the work unit.

Employee Involvement

33	CS	.	CE	.	NCE	33	.	C/T employees share responsibility for the quality of work relationships.
39	CS	32	CE	32	NCE	39	.	Managers provide C/T employees with the opportunity to demonstrate their leadership skills.
40	CS	.	CE	.	NCE	40	.	C/T employees actively seek leadership roles with increased responsibility.
41	CS	33	CE	33	NCE	41	.	Supervisors fully involve C/T employees in the design of their work.
42	CS	34	CE	34	NCE	42	.	C/T employees take the initiative to meet work goals and deadlines.
43	CS	35	CE	35	NCE	43	.	C/T employees are encouraged to identify and solve problems.
44	CS	.	CE	.	NCE	44	.	C/T employees take responsibility for decisions that influence their work.
45	CS	36	CE	36	NCE	45	.	C/T employees look for ways to improve the quality of products, services, and work processes.
46	CS	37	CE	37	NCE	46	.	Supervisors ask for C/T employee ideas and opinions before making important work unit decisions.

Resource Allocation/Utilization

47	CS	38	CE	38	NCE	47	.	C/T employees have enough work space to do their work.
51	CS	41	CE	41	NCE	51	R	Interruptions make it difficult for C/T employees to finish their work on time.
52	CS	42	CE	42	NCE	52	R	Having to get approval from others slows down C/T employees' work.
53	CS	43	CE	43	NCE	53	.	C/T employees have the appropriate supplies, materials, and equipment to perform their jobs well.
54	CS	44	CE	44	NCE	54	.	C/T employees are given reasonable goals and standards to meet.
55	CS	45	CE	45	NCE	55	.	C/T employees have the right mix of skills and knowledge to accomplish work goals.
56	CS	46	CE	46	NCE	56	.	Work is planned so that it can be accomplished during scheduled work hours.
57	CS	47	CE	47	NCE	57	R	The amount of work keeps C/T employees from providing high quality products and services.
58	CS	48	CE	48	NCE	58	.	There is enough time for C/T employees to do their jobs in a professional manner.

(Continued)

CS = Consortium supervisor sample; CE = Consortium employee sample; NCE = Non-consortium employee sample; R = Item is reverse-scored. The number at the far left is a master item number code corresponding to the relative item order in the surveys. The numbers following each sample code (CS, CE, and NCE) is the climate item number within that sample's survey. A dot (.) to the right of a sample code indicates that item was not given to that sample.

Health-Enhancing Work Environment

48	CS	39	CE	39	NCE	48	R	C/T employees feel work-related stress.
49	CS	.	CE	.	NCE	49	.	C/T employees take personal health seriously and maintain optimum fitness for work.
50	CS	40	CE	40	NCE	50	.	C/T employees observe safety rules.

Family/Work/Life Balance

59	CS	49	CE	49	NCE	59	.	C/T employees are given the opportunity to work on flexible work schedules, when the job permits (e.g., Flexitime, Alternative Work Schedule, part-time employment).
60	CS	50	CE	50	NCE	60	.	C/T employees are given the opportunity to work at home, when the job permits (e.g., Flexiplace, work-at-home).
61	CS	51	CE	51	NCE	61	.	C/T employees do not allow personal activities to interfere with work (e.g., frequent absenteeism, lengthy personal phone calls).
62	CS	52	CE	52	NCE	62	.	Supervisors understand and support C/T employees' family and personal life responsibilities.
63	CS	.	CE	.	NCE	63	.	C/T employees actively seek to balance their commitment to work and their family and personal life needs to ensure that work gets done.

Supervision/Management

38	CS	31	CE	31	NCE	38	.	C/T employees openly discuss their needs and concerns with supervisors.
64	CS	53	CE	53	NCE	64	.	Supervisors provide fair and accurate ratings of C/T employee performance.
65	CS	54	CE	54	NCE	65	.	Supervisors provide C/T employees with constructive suggestions to improve their job performance.
66	CS	55	CE	55	NCE	66	.	Supervisors clearly communicate what is expected of C/T employees in terms of job performance (e.g., task responsibilities, performance standards).
68	CS	57	CE	57	NCE	68	.	Supervisors take the time to improve the job performance of C/T employees.
69	CS	58	CE	58	NCE	69	.	Supervisors set high standards of performance for C/T employees.
70	CS	59	CE	59	NCE	70	.	Supervisors build C/T employees' self-confidence.
71	CS	60	CE	60	NCE	71	.	C/T employees receive help from their supervisors when there is a work-related problem.

Teamwork

73	CS	62	CE	62	NCE	73	.	A spirit of cooperation and teamwork exists among C/T employees.
74	CS	63	CE	63	NCE	74	.	A spirit of cooperation and teamwork exists among all employees in the work unit (e.g., C/T employees, professional employees, supervisors).
75	CS	64	CE	64	NCE	75	.	C/T employees participate in teams to accomplish work unit goals.

Job Security and Commitment to Workforce

9	CS	.	CE	.	NCE	9	.	C/T employees respond to opportunities to gain new knowledge and develop new skills.

Organizational Unit Experiences

Training and Career Development

76	CS	65	CE	65	NCE	.	.	The effectiveness of education and training programs are evaluated and improved on a continuing basis.
77	CS	66	CE	66	NCE	.	.	Individual training plans are fully integrated into the organization's overall strategy and planning for quality.
78	CS	67	CE	67	NCE	76	.	Supervisors and managers serve as coaches and mentors to help C/T employees advance in their careers.

(Continued)

CS = Consortium supervisor sample; CE = Consortium employee sample; NCE = Non-consortium employee sample; R = Item is reverse-scored. The number at the far left is a master item number code corresponding to the relative item order in the surveys. The numbers following each sample code (CS, CE, and NCE) is the climate item number within that sample's survey. A dot (.) to the right of a sample code indicates that item was not given to that sample.

Reward and Recognition

79	CS	68	CE	68	NCE	77	.	High performing C/T employees receive monetary rewards (e.g., cash awards, bonuses, quality step increases).
80	CS	69	CE	69	NCE	78	.	High performing C/T employees receive non-monetary rewards (e. g., plaques, letters of appreciation).
81	CS	70	CE	70	NCE	79	.	Managers recognize and give credit for the full contributions of C/T employees.
82	CS	71	CE	71	NCE	80	.	High performing C/T employees are publicly recognized (e.g., organization-wide award ceremony, recognition in newsletter).

Innovation and Risk-Taking

84	CS	72	CE	72	NCE	82	.	There is an investment in technologies (e.g., computers, PAX machines) that make C/T employees' work more efficient and easy to perform.
85	CS	.	CE	.	NCE	83	.	New technologies that provide safe and ergonomically sound (physically supportive) work conditions are sought out and used.
86	CS	.	CE	.	NCE	84	.	New technologies that enhance C/T employee capabilities are sought out and used.
87	CS	.	CE	.	NCE	85	.	New technologies that makes C/T employees' work more enjoyable and satisfying are sought out and used.
88	CS	73	CE	73	NCE	86	.	C/T employees are asked to provide input about the types of technologies that would make their work more efficient and easy to perform.
89	CS	74	CE	74	NCE	87	.	Managers are receptive to change (e.g., new ways of doing work, structuring the organization)..

Customer Focus

90	CS	75	CE	75	NCE	88	.	Customers have the opportunity to formally evaluate the quality of products and services provided by C/T employees (e.g., customer satisfaction surveys).
91	CS	.	CE	.	NCE	89	.	There is a strong focus on the customer.
92	CS	76	CE	76	NCE	90	.	There is a commitment to providing high-quality, ethically sound products and services.
97	CS	81	CE	81	NCE	94	.	The goal is to exceed customer expectations.
160	CS	128	CE	128	NCE	.	.	Products, services, and work processes are designed to meet or exceed customer needs and expectations.

Leadership and Commitment to Quality

93	CS	77	CE	77	NCE	91	.	Managers inspire C/T employee to take pride in their work.
94	CS	78	CE	78	NCE	92	.	Managers ask C/T employees about ways to improve the work produced.
95	CS	79	CE	79	NCE	93	.	Managers follow up on C/T employee suggestions for improvements in products, services, and work processes.
96	CS	80	CE	80	NCE	.	.	Managers provide the resources (e.g., time, training, dollars) needed to improve the quality of products and services provided to customers.
98	CS	82	CE	82	NCE	95	.	Managers communicate the organization's vision, goals, and values related to quality and high performance.
99	CS	83	CE	83	NCE	96	.	Managers demonstrate that quality is important in their day-to-day activities (e.g., hold meetings to discuss quality issues, interact with customers).

Institutional Fairness

100	CS	84	CE	84	NCE	97	.	An atmosphere of trust exists between managers and C/T employees.
101	CS	85	CE	85	NCE	98	.	The promotion system is fair.
102	CS	.	CE	.	NCE	99	.	C/T employee rights to privacy are protected.
103	CS	.	CE	.	NCE	100	.	C/T employee rights to dissent are protected.

Open Communication

118	CS	96	CE	96	NCE	115	.	Managers promote effective communication between different work units (e.g., about projects, goals, needed resources).
119	CS	97	CE	97	NCE	116	.	Managers openly communicate about the organization's conditions, operations, and choices is faces.
120	CS	98	CE	98	NCE	117	.	Managers openly communicate about the organization's future plans.
121	CS	.	CE	.	NCE	118	.	C/T employees respect the confidentiality of organizational information that is shared by managers.
122	CS	.	CE	.	NCE	119	.	Information sharing occurs at all levels of the organization.

(Continued)

CS = Consortium supervisor sample; CE = Consortium employee sample; NCE = Non-consortium employee sample; R = Item is reverse-scored. The number at the far left is a master item number code corresponding to the relative item order in the surveys. The numbers following each sample code (CS, CE, and NCE) is the climate item number within that sample's survey. A dot (.) to the right of a sample code indicates that item was not given to that sample.

Employee Involvement

123	CS	99	CE	99	NCE	120	.	C/T employees actively seek opportunities to contribute ideas and suggestions to managers.
124	CS	.	CE	.	NCE	121	.	Supervisors and managers recognize the value of C/T employee participation in achieving the goals of the organization.

Health-Enhancing Work Environment

125	CS	100	CE	100	NCE	122	.	Physical conditions (e.g., noise, temperature, lighting, cleanliness) make it easy for C/T employees to perform their jobs well.
126	CS	101	CE	101	NCE	123	.	C/T employees are protected from health and safety hazards on the job.
127	CS	102	CE	102	NCE	124	.	Programs that encourage good health practices are promoted (e.g., fitness centers, health education programs).
128	CS	.	CE	.	NCE	125	.	Managers work to promote physical health in the workplace.
129	CS	.	CE	.	NCE	126	.	Managers work to promote psychological health in the workplace.

Family/Work/Life Balance

130	CS	103	CE	103	NCE	127	.	Programs that help C/T employees deal with work and family responsibilities are provided (e.g., employee assistance programs, support groups, stress management courses).
131	CS	104	CE	104	NCE	128	.	Family-related benefits are available to C/T employees (e.g., parental leave policies, on-site child care, elder care).
132	CS	.	CE	.	NCE	129	.	There are policies and practices that help employees balance their work, family, and personal life needs.

Teamwork

148	CS	116	CE	116	NCE	145	.	Different work units cooperate to get the job done.
149	CS	117	CE	117	NCE	146	.	C/T employees in different work units participate in cross-unit teams to improve the quality of products and services, and to solve problems.
150	CS	118	CE	118	NCE	147	.	Supervisors and managers recognize the contributions of teams.

Diversity

104	CS	86	CE	86	NCE	101	.	Differences among C/T employees (e.g., sex, race, national origin, age, cultural background) are appreciated.
105	CS	87	CE	87	NCE	102	R	Managers ignore minor acts of sexual harassment.
106	CS	.	CE	.	NCE	103	.	Managers see diversity as a source of stimulation and enrichment.
107	CS	88	CE	88	NCE	104	.	Persons with disabilities are accepted and feel part of the organization.
108	CS	89	CE	89	NCE	105	.	C/T employees value the racial and cultural differences of others.
109	CS	90	CE	90	NCE	106	.	Advancement opportunities are available for top qualified C/T employees, regardless of sex, race, national origin, cultural background, or disability.
110	CS	91	CE	91	NCE	107	.	Accommodations are made for persons with disabilities (e.g., availability of sign language interpreters, ramps, braille).
111	CS	92	CE	92	NCE	108	.	Personnel policies promote diversity in the workplace (e.g., recruiting minorities and women, training in awareness of diversity issues, mentoring).
112	CS	93	CE	93	NCE	109	.	Supervisors and managers act to eliminate prejudice and discrimination. (NCE: CS CE NCE, CE in the workplace).
113	CS	94	CE	94	NCE	110	.	C/T Employees treat each other with courtesy and respect.
114	CS	.	CE	.	NCE	111	.	C/T employees feel responsible for preventing discrimination in the workplace.
115	CS	95	CE	95	NCE	112	.	Managers encourage C/T employees to express their own preferences, beliefs, and opinions.
116	CS	.	CE	.	NCE	113	.	Managers nurture self-expression and promote tolerance.
117	CS	.	CE	.	NCE	114	.	There are policies and practices that assure equality of employment and opportunity.

(Continued)

CS = Consortium supervisor sample; CE = Consortium employee sample; NCE = Non-consortium employee sample; . R = Item is reverse-scored. The number at the far left is a master item number code corresponding to the relative item order in the surveys. The numbers following each sample code (CS, CE, and NCE) is the climate item number within that sample's survey. A dot (.) to the right of a sample code indicates that item was not given to that sample.

Social Responsibility

133	CS	.	CE	.	NCE	130	.	There is a commitment to providing benefits to the social well-being of the community and nation.
134	CS	105	CE	105	NCE	131	.	There is an organizational commitment to improving community life (e.g., partnerships with schools).
135	CS	106	CE	106	NCE	132	.	Managers encourage C/T employees to participate in charity campaigns sponsored by the organization (e.g., Combined Federal Campaign, holiday food drives).
136	CS	107	CE	107	NCE	133	.	C/T employees who volunteer for community activities outside of work are supported and rewarded.
137	CS	108	CE	108	NCE	134	.	There are policies and practices that reflect a commitment to preserving and restoring environmental health (e.g., recycling, pollution control).
138	CS	109	CE	109	NCE	135	.	C/T employees assist the organization in meeting its commitment to preserving and restoring environmental health (e.g., participate in recycling).
139	CS	.	CE	.	NCE	136	.	C/T employees share public responsibilities as active citizens.
140	CS	110	CE	110	NCE	137	.	C/T employees volunteer for community service and charity campaigns outside of work (e.g., Special Olympics, American Cancer Society).

Job Security and Commitment to Workforce

83	CS	.	CE	.	NCE	81	.	C/T employees give full value in their contribution to the organization (e.g., work at 100% capacity).
141	CS	111	CE	111	NCE	138	.	C/T employees are rewarded for having the skills to perform many different work roles.
142	CS	112	CE	112	NCE	139	.	C/T employees are rewarded for being knowledgeable about several areas/functions of the organization.
143	CS	113	CE	113	NCE	140	.	Programs that help C/T employees deal with reductions in force are promoted (e.g., retraining, career counseling, aid in finding new jobs).
144	CS	.	CE	.	NCE	141	.	It is recognized that the economic security of the organization and that of its workforce are one and the same.
145	CS	114	CE	114	NCE	142	.	C/T employees are willing to be retrained and moved to other positions in the organization to protect their employment security.
146	CS	115	CE	115	NCE	143	.	C/T employees are provided with job security.
147	CS	.	CE	.	NCE	144	.	C/T employees recognize that their individual job security is linked to the long-term success of the organization.

Strategic Planning

151	CS	119	CE	119	NCE	.	.	Managers plan for the organization's future.
152	CS	120	CE	120	NCE	.	.	Managers set long-term quality improvement goals and objectives.
154	CS	122	CE	122	NCE	148	.	C/T employees participate in planning for the organization's future (e.g., strategic plans, goals).
155	CS	123	CE	123	NCE	.	.	Managers develop and use strategies that continually adapt to the changing world.

Measurement and Analysis

153	CS	121	CE	121	NCE	.	.	Managers regularly review the organization's progress toward meeting its goals and objectives.
156	CS	124	CE	124	NCE	.	.	Information on quality and timeliness are collected on all products and services from customers.
157	CS	125	CE	125	NCE	.	.	Formal attempts are made to measure the extent to which the organization is meeting its goals and objectives.
158	CS	126	CE	126	NCE	.	.	The quality of products and services provided to customers is compared to the performance of other organizations that are recognized as successful.
159	CS	127	CE	127	NCE	.	.	Appropriate advanced technology and tools are used in all work processes and in information collection.
161	CS	129	CE	129	NCE	.	.	Comprehensive assessments of quality, quality systems and quality processes are performed at regular intervals across the organization.
162	CS	130	CE	130	NCE	.	.	Findings from the quality assessment process are used to improve quality and prevent problems.
163	CS	131	CE	131	NCE	.	.	Quality is the key factor used in selecting suppliers.

CS = Consortium supervisor sample; CE = Consortium employee sample; NCE = Non-consortium employee sample; R = Item is reverse-scored. The number at the far left is a master item number code corresponding to the relative item order in the surveys. The numbers following each sample code (CS, CE, and NCE) is the climate item number within that sample's survey. A dot (.) to the right of a sample code indicates that item was not given to that sample.

Appendix C

Work Unit Experiences Scale
Consortium Employee Subsample #1

Model Shaping: Modifications in the Initial Factor Analysis

Appendix C
Work Unit Experiences Scale, Consortium Employee Subsample #1
Model Shaping: Modifications in the Initial Factor Analysis

First Modified Model: χ^2 (1806, N=4921) = 22654.76, $p < .01$, GFI = .84

Loaded Item 24 onto Factor 1 (Training and Career Development)
#24: C/T employees receive training and guidance in providing high quality products and services to customers. (A priori loaded on Customer Focus factor)

Loaded Item 13 onto Factor 2 (Reward and Recognition)
#13: Supervisors are fair in rewarding C/T employee contributions. (A priori loaded on Institutional Fairness factor)

Loaded Item 14 onto Factor 2 (Reward and Recognition)
#14: C/T employees are rewarded for showing creativity and innovation. (A priori loaded on Innovation and Risk-Taking factor)

Loaded Item 72 onto Factor 13 (Supervision/Management)
#72: There is trust between C/T employees and their supervisors. (A priori loaded on Institutional Fairness factor)

Loaded Item 30 onto Factor 1 (Training and Career Development)
#30: Decisions about training and career development opportunities (e.g., job assignments) for C/T employees are fair. (A priori loaded on Institutional Fairness)

Freed Item Residual Covariances
Items 57 and 58
#57: The amount of work keeps C/T employees from providing high quality products and services.
#58: There is enough time for C/T employees to do their jobs in a professional manner.

Items 35 and 37
#35: C/T employees are kept well informed on all issues affecting their job.
#37: Information flows freely from supervisors to C/T employees.

Items 66 and 67
#66: Supervisors clearly communicate what is expected of C/T employees in terms of job performance (e.g., task responsibilities, performance standards).
#67: Supervisors clearly communicate to C/T employees the goals and priorities of the work unit.

Second Modified Model: χ^2 (1798, N=4921) = 20187.98, $p < .01$, GFI = .86

Loaded Item 19 onto Factor 1 (Training and Career Development)
#19: C/T employees receive training when new technologies and tools are introduced. (A priori loaded on Innovation and Risk-Taking factor)

Loaded Item 31 onto Factor 13 (Supervision/Management)
#31: Supervisors treat C/T employees with respect. (A priori loaded on Institutional Fairness)

Loaded Item 16 onto Factor 8 (Employee Involvement)
#16: C/T employees are encouraged to come up with new and better ways of doing things. (A priori loaded on Innovation and Risk-Taking)

Removed Item 14 from Factor 3 (Innovation and Risk-Taking)
#14: C/T employees are rewarded for showing creativity and innovation. (Now loaded onto Reward and Recognition)

Freed Item Residual Covariances
Items 3 and 7
#3: C/T employees are provided with frequent opportunities to learn, update, and expand their knowledge and skills.
#7: C/T employees are provided with training that enhances their career development and their advancement opportunities (e.g., through cross-training, detail assignments).

(Continued)

Second Modified Model (Continued)

Items 10 and 11
#10: High performing C/T employees are rewarded with more challenging and rewarding work.
#11: High performing C/T employees are promoted.

Items 13 and 64
#13: Supervisors are fair in rewarding C/T employee contributions.
#64: Supervisors provide fair and accurate ratings of C/T employee performance.

Items 47 and 53
#47: C/T employees have enough work space to do their work.
#53: C/T employees have the appropriate supplies, materials, and equipment to perform their jobs well.

Items 56 and 58
#56: Work is planned so that it can be accomplished during scheduled work hours.
#58: There is enough time for C/T employees to do their jobs in a professional manner.

Items 59 and 60
#59: C/T employees are given the opportunity to work on flexible work schedules, when the job permits (e.g., Flexitime, Alternative Work Schedule, part-time employment).
#60: C/T employees are given the opportunity to work at home, when the job permits (e.g., Flexiplace, work-at-home).

Third Modified Model: $\chi^2(1780, N=4921) = 15487.12, p<.01$, GFI = .90

Removed Item 13 onto Factor 6 (Institutional Fairness)
#13: Supervisors are fair in rewarding C/T employee contributions. (Now loaded onto Reward and Recognition)

Removed Item 16 from Factor 3 (Innovation and Risk-Taking)
#16: C/T employees are encouraged to come up with new and better ways of doing things. (Now loaded onto Employee Involvement)

Removed Item 19 from Factor 3 (Innovation and Risk-Taking)
#19: C/T employees receive training when new technologies and tools are introduced. (Now loaded onto Training and Career Development)

Removed Item 24 from Factor 4 (Customer Focus)
#24: C/T employees receive training and guidance in providing high quality products and services to customers. (Now loaded onto Training and Career Development)

Removed Item 72 from Factor 6 (Institutional Fairness)
#72: There is trust between C/T employees and their supervisors. (Now loaded onto Supervision/Management)

Removed Item 31 from Factor 6 (Institutional Fairness)
#31: Supervisors treat C/T employees with respect. (Now loaded onto Supervision/Management)

(Continued)

Third Modified Model (Continued)

Specified an Employee-Oriented Factor (Factor 14) with the Following Items Double-loaded onto It[1]

#21: C/T employees have a good understanding of who they serve as customers.
#23: C/T employees use suggestions from their customers to improve the quality of products and services.
#25: C/T employees are committed to providing high quality products and services to customers.
#26: C/T employees live up to high ethical standards.
#38: C/T employees openly discuss their needs and concerns with supervisors.
#42: C/T employees take the initiative to meet work goals and deadlines.
#45: C/T employees look for ways to improve the quality of products, services, and work processes.
#55: C/T employees have the right mix of skills and knowledge to accomplish work goals.
#61: C/T employees do not allow personal activities to interfere with work (e.g., frequent absenteeism, lengthy personal phone calls).
#73: A spirit of cooperation and teamwork exists among C/T employees.

Freed Item Residual Covariances
Items 65 and 66
#65: Supervisors provide C/T employees with constructive suggestions to improve their job performance.
#66: Supervisors clearly communicate what is expected of C/T employees in terms of job performance (e.g., task responsibilities, performance standards).

Fourth Modified Model: χ^2 (1762, N=4921) = 14398.37, p<.01, GFI = .91

Specified a Reverse-Scored Item Factor (Factor 15) with the Following Items Double-loaded onto It[2]

#15: C/T employees find it difficult to change the way things are done.
#51: Interruptions make it difficult for C/T employees to finish their work on time.
#52: Having to get approval from others slows down C/T employees' work.
#57: The amount of work keeps C/T employees from providing high quality products and services.

---

[1]All items identified as definite employee-oriented prior to the initial confirmatory factor analysis were loaded onto this factor (except for item 50, which could not be double-loaded because it was the sole indicator for Factor 9) regardless as to differences among them in their modification indices.

[2]All reverse-scored items identified were loaded onto this factor except item #48 which was dropped from the initial model.

Appendix D

Average Interrater Agreements

Consortium Incumbents, Subsample #2

Appendix D

Average Interrater Agreements, Consortium Incumbents, Subsample #2

Item #	Finn	Usala	Usala < .3	
1	.29	.30		C/T employees receive the formal training they need to perform their jobs effectively (e.g., on-the-job training, conferences, workshops).
2	.49	.50		C/T employees receive the everyday guidance and assistance they need to perform their jobs effectively (e.g., help from supervisors or co-workers).
3	.28	.30	yes	C/T employees are provided with frequent opportunities to learn, update, and expand their knowledge and skills.
4	.53	.54		C/T employees have access to manuals and other written materials that help them perform their jobs effectively.
5	.30	.32		New C/T employees are provided with adequate orientation information to perform their jobs (e.g., through formal orientation programs, informal communication, reading materials).
6	.30	.31		Supervisors are aware of C/T employees' training needs and help them meet these needs (e.g., send C/T employees to appropriate training courses, provide assistance, coaching).
7	.29	.31		C/T employees are provided with training that enhances their career development and their advancement opportunities (e.g., through cross-training, detail assignments).
8	.58	.59		C/T employees share their knowledge with co-workers.
9	.62	.63		C/T employees respond to opportunities to gain new knowledge and develop new skills.
10	.30	.31		High performing C/T employees are rewarded with more challenging and rewarding work.
11	.32	.33		High performing C/T employees are promoted.
12	.33	.34		C/T employees are rewarded for providing high quality products and services to customers.
13	.28	.30	yes	Supervisors are fair in rewarding C/T employee contributions.
14	.37	.39		C/T employees are rewarded for showing creativity and innovation.
15	.29	.31		C/T employees find it difficult to change the way things are done.
16	.43	.44		C/T employees are encouraged to come up with new and better ways of doing things.
17	.46	.47		C/T employees are encouraged to stay current and informed about new office technology (e.g., computers, FAX machines).
18	.70	.71		C/T employees adapt to new technologies and learn how to use new tools.
19	.41	.42		C/T employees receive training when new technologies and tools are introduced.
20	.71	.72		C/T employees support innovation and technological changes which result in higher quality products and services.
21	.64	.65		C/T employees have a good understanding of who they serve as customers.
22	.54	.55		C/T employees receive information about their customers' requirements and expectations through a variety of effective methods.
23	.61	.61		C/T employees use suggestions from their customers to improve the quality of products and services.
24	.47	.48		C/T employees receive training and guidance in providing high quality products and services to customers.
25	.66	.67		C/T employees are committed to providing high quality products and services to customers.
26	.59	.60		C/T employees live up to high ethical standards.
27	.35	.36		Supervisors let C/T employees know how their work contributes to the organization's mission and goals.
28	.25	.27	yes	Discipline is administered fairly to C/T employees.
29	.26	.28	yes	The distribution of work among C/T employees is evenly balanced.
30	.36	.38		Decisions about training and career development opportunities (e.g., job assignments) for C/T employees are fair.
31	.32	.33		Supervisors treat C/T employees with respect.
32	.35	.37		Disputes or conflicts (e.g., between co-workers) are quickly and fairly resolved.
33	.52	.53		C/T employees share responsibility for the quality of work relationships.
34	.56	.57		C/T employees follow existing policies and practices (e.g., do not cut corners, take advantage of system).
35	.29	.30		C/T employees are kept well informed on all issues affecting their job.
36	.47	.48		C/T employees participate in honest and forthright dialogue with supervisors.
37	.29	.30		Information flows freely from supervisors to C/T employees.
38	.41	.42		C/T employees openly discuss their needs and concerns with supervisors.
39	.35	.37		Managers provide C/T employees with the opportunity to demonstrate their leadership skills.
40	.58	.59		C/T employees actively seek leadership roles with increased responsibility.
41	.39	.41		Supervisors fully involve C/T employees in the design of their work.
42	.70	.70		C/T employees take the initiative to meet work goals and deadlines.
43	.54	.55		C/T employees are encouraged to identify and solve problems.
44	.58	.59		C/T employees take responsibility for decisions that influence their work.
45	.67	.68		C/T employees look for ways to improve the quality of products, services, and work processes.

(Continued)

Appendix D (continued)

Item #	Fina	Usala	Usala < .3	
46	.34	.35		Supervisors ask for C/T employee ideas and opinions before making important work unit decisions.
47	.20	.22	yes	C/T employees have enough work space to do their work.
48	.35	.36		C/T employees feel work-related stress.
49	.57	.58		C/T employees take personal health seriously and maintain optimum fitness for work.
50	.76	.76		C/T employees observe safety rules.
51	.36	.38		Interruptions make it difficult for C/T employees to finish their work on time.
52	.45	.46		Having to get approval from others slows down C/T employees' work.
53	.41	.42		C/T employees have the appropriate supplies, materials, and equipment to perform their jobs well.
54	.55	.56		C/T employees are given reasonable goals and standards to meet.
55	.66	.66		C/T employees have the right mix of skills and knowledge to accomplish work goals.
56	.53	.54		Work is planned so that it can be accomplished during scheduled work hours.
57	.45	.46		The amount of work keeps C/T employees from providing high quality products and services.
58	.48	.49		There is enough time for C/T employees to do their jobs in a professional manner.
59	.29	.30	yes	C/T employees are given the opportunity to work on flexible work schedules, when the job permits (e.g., Flexitime, Alternative Work Schedule, part-time employment).
60	.49	.51		C/T employees are given the opportunity to work at home, when the job permits (e.g., Flexiplace, work-at-home).
61	.32	.33		C/T employees do not allow personal activities to interfere with work (e.g., frequent absenteeism, lengthy personal phone calls).
62	.42	.44		Supervisors understand and support C/T employees' family and personal life responsibilities.
63	.69	.70		C/T employees actively seek to balance their commitment to work and their family and personal life needs to ensure that work gets done.
64	.22	.24	yes	Supervisors provide fair and accurate ratings of C/T employee performance.
65	.42	.44		Supervisors provide C/T employees with constructive suggestions to improve their job performance.
66	.39	.41		Supervisors clearly communicate what is expected of C/T employees in terms of job performance (e.g., task responsibilities, performance standards).
67	.44	.45		Supervisors clearly communicate to C/T employees the goals and priorities of the work unit.
68	.43	.44		Supervisors take the time to improve the job performance of C/T employees.
69	.51	.52		Supervisors set high standards of performance for C/T employees.
70	.35	.36		Supervisors build C/T employees' self-confidence.
71	.51	.52		C/T employees receive help from their supervisors when there is a work-related problem.
72	.24	.25	yes	There is trust between C/T employees and their supervisors.
73	.40	.41		A spirit of cooperation and teamwork exists among C/T employees.
74	.29	.30		A spirit of cooperation and teamwork exists among all employees in the work unit (e.g., C/T employees, professional employees, supervisors).
75	.42	.43		C/T employees participate in teams to accomplish work unit goals.
76	.38	.39		The effectiveness of education and training programs are evaluated and improved on a continuing basis.
77	.39	.40		Individual training plans are fully integrated into the organization's overall strategy and planning for quality.
78	.36	.38		Supervisors and managers serve as coaches and mentors to help C/T employees advance in their careers.
79	.27	.28	yes	High performing C/T employees receive monetary rewards (e.g., cash awards, bonuses, quality step increases).
80	.27	.29	yes	High performing C/T employees receive non-monetary rewards (e. g., plaques, letters of appreciation).
81	.31	.32		Managers recognize and give credit for the full contributions of C/T employees.
82	.31	.33		High performing C/T employees are publicly recognized (e.g., organization-wide award ceremony, recognition in newsletter).
83	.50	.51		C/T employees give full value in their contribution to the organization (e.g., work at 100% capacity).
84	.53	.54		There is an investment in technologies (e.g., computers, FAX machines) that make C/T employees' work more efficient and easy to perform.
85	.49	.51		New technologies that provide safe and ergonomically sound (physically supportive) work conditions are sought out and used.
86	.52	.54		New technologies that enhance C/T employee capabilities are sought out and used.
87	.49	.50		New technologies that makes C/T employees' work more enjoyable and satisfying are sought out and used.
88	.40	.41		C/T employees are asked to provide input about the types of technologies that would make their work more efficient and easy to perform.
89	.40	.41		Managers are receptive to change (e.g., new ways of doing work, structuring the organization)..
90	.45	.46		Customers have the opportunity to formally evaluate the quality of products and services provided by C/T employees (e.g., customer satisfaction surveys).
91	.57	.58		There is a strong focus on the customer.
92	.63	.63		There is a commitment to providing high-quality, ethically sound products and services.

(Continued)

Appendix D (Continued)

Item #	Fian	Usab	Usab < .3	
93	.43	.45		Managers inspire C/T employee to take pride in their work.
94	.44	.45		Managers ask C/T employees about ways to improve the work produced.
95	.47	.48		Managers follow up on C/T employee suggestions for improvements in products, services, and work processes.
96	.49	.50		Managers provide the resources (e.g., time, training, dollars) needed to improve the quality of products and services provided to customers.
97	.59	.60		The goal is to exceed customer expectations.
98	.51	.52		Managers communicate the organization's vision, goals, and values related to quality and high performance.
99	.40	.42		Managers demonstrate that quality is important in their day-to-day activities (e.g., hold meetings to discuss quality issues, interact with customers).
100	.32	.34		An atmosphere of trust exists between managers and C/T employees.
101	.39	.40		The promotion system is fair.
102	.41	.42		C/T employee rights to privacy are protected.
103	.46	.47		C/T employee rights to dissent are protected.
104	.46	.47		Differences among C/T employees (e.g., sex, race, national origin, age, cultural background) are appreciated.
105	.41	.42		Managers ignore minor acts of sexual harassment.
106	.59	.60		Managers see diversity as a source of stimulation and enrichment.
107	.65	.66		Persons with disabilities are accepted and feel part of the organization.
108	.60	.61		C/T employees value the racial and cultural differences of others.
109	.26	.28	yes	Advancement opportunities are available for top qualified C/T employees, regardless of sex, race, national origin, cultural background, or disability.
110	.59	.60		Accommodations are made for persons with disabilities (e.g., availability of sign language interpreters, ramps, braille).
111	.53	.54		Personnel policies promote diversity in the workplace (e.g., recruiting minorities and women, training in awareness of diversity issues, mentoring).
112	.43	.44		Supervisors and managers act to eliminate prejudice and discrimination. [NCE; CS CE NCE, CE in the workplace].
113	.54	.55		C/T Employees treat each other with courtesy and respect.
114	.59	.60		C/T employees feel responsible for preventing discrimination in the workplace.
115	.46	.48		Managers encourage C/T employees to express their own preferences, beliefs, and opinions.
116	.52	.54		Managers nurture self-expression and promote tolerance.
117	.45	.46		There are policies and practices that assure equality of employment and opportunity.
118	.43	.44		Managers promote effective communication between different work units (e.g., about projects, goals, needed resources).
119	.44	.45		Managers openly communicate about the organization's conditions, operations, and choices it faces.
120	.41	.42		Managers openly communicate about the organization's future plans.
121	.62	.63		C/T employees respect the confidentiality of organizational information that is shared by managers.
122	.37	.38		Information sharing occurs at all levels of the organization.
123	.58	.59		C/T employees actively seek opportunities to contribute ideas and suggestions to managers.
124	.48	.50		Supervisors and managers recognize the value of C/T employee participation in achieving the goals of the organization.
125	.28	.29	yes	Physical conditions (e.g., noise, temperature, lighting, cleanliness) make it easy for C/T employees to perform their jobs well.
126	.47	.48		C/T employees are protected from health and safety hazards on the job.
127	.27	.29	yes	Programs that encourage good health practices are promoted (e.g., fitness centers, health education programs).
128	.47	.48		Managers work to promote physical health in the workplace.
129	.45	.47		Managers work to promote psychological health in the workplace.
130	.49	.50		Programs that help C/T employees deal with work and family responsibilities are provided (e.g., employee assistance programs, support groups, stress management courses).
131	.35	.36		Family-related benefits are available to C/T employees (e.g., parental leave policies, on-site child care, elder care).
132	.50	.51		There are policies and practices that help employees balance their work, family, and personal life needs.
133	.54	.56		There is a commitment to providing benefits to the social well-being of the community and nation.
134	.50	.51		There is an organizational commitment to improving community life (e.g., partnerships with schools).
135	.58	.59		Managers encourage C/T employees to participate in charity campaigns sponsored by the organization (e.g., Combined Federal Campaign, holiday food drives).

(Continued)

Appendix D (continued)

Item #	Fins	Usals	Usals < .3	
136	.48	.49		C/T employees who volunteer for community activities outside of work are supported and rewarded.
137	.55	.56		There are policies and practices that reflect a commitment to preserving and restoring environmental health (e.g., recycling, pollution control).
138	.62	.63		C/T employees assist the organization in meeting its commitment to preserving and restoring environmental health (e.g., participate in recycling).
139	.67	.68		C/T employees share public responsibilities as active citizens.
140	.61	.61		C/T employees volunteer for community service and charity campaigns outside of work (e.g., Special Olympics, American Cancer Society).
141	.46	.47		C/T employees are rewarded for having the skills to perform many different work roles.
142	.49	.50		C/T employees are rewarded for being knowledgeable about several areas/functions of the organization.
143	.49	.50		Programs that help C/T employees deal with reductions in force are promoted (e.g., retraining, career counseling, aid in finding new jobs).
144	.58	.59		It is recognized that the economic security of the organization and that of its workforce are one and the same.
145	.67	.68		C/T employees are willing to be retrained and moved to other positions in the organization to protect their employment security.
146	.50	.51		C/T employees are provided with job security.
147	.60	.61		C/T employees recognize that their individual job security is linked to the long-term success of the organization.
148	.58	.59		Different work units cooperate to get the job done.
149	.53	.54		C/T employees in different work units participate in cross-unit teams to improve the quality of products and services, and to solve problems.
150	.51	.52		Supervisors and managers recognize the contributions of teams.
151	.54	.55		Managers plan for the organization's future.
152	.53	.53		Managers set long-term quality improvement goals and objectives.
153	.56	.57		Managers regularly review the organization's progress toward meeting its goals and objectives.
154	.44	.45		C/T employees participate in planning for the organization's future (e.g., strategic plans, goals).
155	.51	.52		Managers develop and use strategies that continually adapt to the changing world.
156	.60	.61		Information on quality and timeliness are collected on all products and services from customers.
157	.62	.62		Formal attempts are made to measure the extent to which the organization is meeting its goals and objectives.
158	.61	.62		The quality of products and services provided to customers is compared to the performance of other organizations that are recognized as successful.
159	.54	.55		Appropriate advanced technology and tools are used in all work processes and in information collection.
160	.63	.64		Products, services, and work processes are designed to meet or exceed customer needs and expectations.
161	.59	.60		Comprehensive assessments of quality, quality systems and quality processes are performed at regular intervals across the organization.
162	.57	.58		Findings from the quality assessment process are used to improve quality and prevent problems.
163	.42	.43		Quality is the key factor used in selecting suppliers.

Appendix E

Final Dimension Assignments Based on LISREL Factor Loadings and Cronbach's Coefficient Alpha

Appendix E
Final Dimension Assignments Based on LISREL Factor Loadings and Cronbach's Coefficient Alpha

TRAINING AND CAREER DEVELOPMENT

		CE	NE	α_{CE}	α_{NE}	
				.89	.90	
1	WU	.73	.76	*	*	C/T employees receive the formal training they need to perform their jobs effectively (e.g., on-the-job training, conferences, workshops).
2	WU	.66	.67	*	*	C/T employees receive the everyday guidance and assistance they need to perform their jobs effectively (e.g., help from supervisors or co-workers).
3*	WU	.72	.77	*	*	C/T employees are provided with frequent opportunities to learn, update, and expand their knowledge and skills.
4	WU	.60	.59	*	*	C/T employees have access to manuals and other written materials that help them perform their jobs effectively.
5	WU	.71	.70	*	*	New C/T employees are provided with adequate orientation information to perform their jobs (e.g., through formal orientation programs, informal communication, reading materials).
6	WU	.78	.82	*	*	Supervisors are aware of C/T employees' training needs and help them meet these needs (e.g., send C/T employees to appropriate training courses, provide assistance, coaching).
7	WU	.66	.71	*	*	C/T employees are provided with training that enhances their career development and their advancement opportunities (e.g., through cross-training, detail assignments).
19	WU	.62	.64	*	*	C/T employees receive training when new technologies and tools are introduced.
24	WU	.70	.73	*	*	C/T employees receive training and guidance in providing high quality products and services to customers.
(30	WU	.36	.41			*Decisions about training and career development opportunities (e.g., job assignments) for C/T employees are fair.*) DOUBLE-LOADED ONTO INSTITUTIONAL FAIRNESS
				.84	-	
76	OE	.79	-	*		The effectiveness of education and training programs are evaluated and improved on a continuing basis.
77	OE	.87	-	*		Individual training plans are fully integrated into the organization's overall strategy and planning for quality.

REWARD AND RECOGNITION

		CE	NE	α_{CE}	α_{NE}	
				.88	.88	
10	WU	.67	.66	*	*	High performing C/T employees are rewarded with more challenging and rewarding work.
11	WU	.65	.65	*	*	High performing C/T employees are promoted.
12	WU	.78	.80	*	*	C/T employees are rewarded for providing high quality products and services to customers.
13*	WU	.80	.81	*	*	Supervisors are fair in rewarding C/T employee contributions.
14	WU	.84	.84	*	*	C/T employees are rewarded for showing creativity and innovation.
				.88	.86	
79*	OE	.62	.64	*	*	High performing C/T employees receive monetary rewards (e.g., cash awards, bonuses, quality step increases).
80*	OE	.61	.59	*	*	High performing C/T employees receive non-monetary rewards (e. g., plaques, letters of appreciation).
81	OE	.81	.83	*	*	Managers recognize and give credit for the full contributions of C/T employees.
82	OE	.63	.63	*	*	High performing C/T employees are publicly recognized (e.g., organization-wide award ceremony, recognition in newsletter).
141	OE	.73	.73	*	*	C/T employees are rewarded for having the skills to perform many different work roles.
142	OE	.72	.74	*	*	C/T employees are rewarded for being knowledgeable about several areas/functions of the organization.

(Continued)

Note. CE = Consortium Employees; NE = Nonconsortium Employees; WU = Work Unit Experiences scale; OE = Organizational Experiences scale. * by the item number = interrater agreement below .3; ** under the coefficient alpha = used in computing coefficient alpha; X = dropped from model.

INNOVATION AND RISK TAKING

		CE	NE	α_{CE}	α_{NE}	
				-	.64	
17	WU	.57	.70		*	C/T employees are encouraged to stay current and informed about new office technology (e.g., computers, FAX machines).
18	WU	-	.54		*	C/T employees adapt to new technologies and learn how to use new tools.
20	WU	-	.43		*	C/T employees support innovation and technological changes which result in higher quality products and services.
				.65	.87	
84	OE	.45	.61	*	*	There is an investment in technologies (e.g., computers, FAX machines) that make C/T employees' work more efficient and easy to perform.
85	OE	-	.79		*	New technologies that provide safe and ergonomically sound (physically supportive) work conditions are sought out and used.
86	OE	-	.88		*	New technologies that enhance C/T employee capabilities are sought out and used.
87	OE	-	.85		*	New technologies that makes C/T employees' work more enjoyable and satisfying are sought out and used.
88	OE	.66	.61	*	*	C/T employees are asked to provide input about the types of technologies that would make their work more efficient and easy to perform.
89	OE	.69	.55	*	*	Managers are receptive to change (e.g., new ways of doing work, structuring the organization).

CUSTOMER FOCUS

		CE	NE	α_{CE}	α_{NE}	
				.72	.72	
21	WU	.60	.52	*	*	C/T employees have a good understanding of who they serve as customers.
22	WU	.83	.71	*	*	C/T employees receive information about their customers' requirements and expectations through a variety of effective methods.
23	WU	.47	.49	*	*	C/T employees use suggestions from their customers to improve the quality of products and services.
25	WU	.24	.43	*	*	C/T employees are committed to providing high quality products and services to customers.
				.69	.71	
90	OE	.46	.38	*	*	Customers have the opportunity to formally evaluate the quality of products and services provided by C/T employees (e.g., customer satisfaction surveys).
91	OE	-	.78		*	There is a strong focus on the customer.
92	OE	.59	.79	*	*	There is a commitment to providing high-quality, ethically sound products and services.
97	OE	.57	.67	*	*	The goal is to exceed customer expectations.
160	OE	.67	-	*		Products, services, and work processes are designed to meet or exceed customer needs and expectations.

(Continued)

Note. CE = Consortium Employees; NE = Nonconsortium Employees; WU = Work Unit Experiences scale; OE = Organizational Experiences scale. * by the item number = interrater agreement below .3; ** under the coefficient alpha = used in computing coefficient alpha; X = dropped from model.

INSTITUTIONAL FAIRNESS

		CE	NE	α_{CE}	α_{NE}	
				.78	.81	
26	WU	.18	.42	*	*	C/T employees live up to high ethical standards.
28*	WU	.75	.74	*	*	Discipline is administered fairly to C/T employees.
29*	WU	.63	.67	*	*	The distribution of work among C/T employees is evenly balanced.
30	WU	.41	.38	*	*	Decisions about training and career development opportunities (e.g., job assignments) for C/T employees are fair.
32	WU	.69	.71	*	*	Disputes or conflicts (e.g., between co-workers) are quickly and fairly resolved.
34	WU	-	.50		*	C/T employees follow existing policies and practices (e.g., do not cut corners, take advantage of system).
				.80	.85	
78	OE	.73	.72	*	*	Supervisors and managers serve as coaches and mentors to help C/T employees advance in their careers.
100	OE	.72	.77	*	*	An atmosphere of trust exists between managers and C/T employees.
101	OE	.62	.64	*	*	The promotion system is fair.
102	OE	-	.63		*	C/T employee rights to privacy are protected.
103	OE	-	.67		*	C/T employee rights to dissent are protected.
109*	OE	.62	.62	*	*	Advancement opportunities are available for top qualified C/T employees, regardless of sex, race, national origin, cultural background, or disability

EMPLOYEE INVOLVEMENT

		CE	NE	α_{CE}	α_{NE}	
				.81	.84	
16	WU	.63	.64	*	*	C/T employees are encouraged to come up with new and better ways of doing things.
33	WU	-	.51		*	C/T employees share responsibility for the quality of work relationships.
39	WU	.72	.75	*	*	Managers provide C/T employees with the opportunity to demonstrate their leadership skills.
40	WU	-	.38		*	C/T employees actively seek leadership roles with increased responsibility.
41	WU	.77	.78	*	*	Supervisors fully involve C/T employees in the design of their work.
43	WU	.63	.63	*	*	C/T employees are encouraged to identify and solve problems.
44	WU	-	.46		*	C/T employees take responsibility for decisions that influence their work.
45	WU	.20	.42	*	*	C/T employees look for ways to improve the quality of products, services, and work processes. (EMPLOYEE INVOLVEMENT)
46	WU	.71	.78		*	Supervisors ask for C/T employee ideas and opinions before making important work unit decisions.
				-	.55	
123	OE	1.00	.44		*	C/T employees actively seek opportunities to contribute ideas and suggestions to managers. (FORCED LOADING)
124	OE	-	.80		*	Supervisors and managers recognize the value of C/T employee participation in achieving the goals of the organization.

(Continued)

Note. CE = Consortium Employees; NE = Nonconsortium Employees; WU = Work Unit Experiences scale; OE = Organizational Experiences scale. * by the item number = interrater agreement below .3; ** under the coefficient alpha = used in computing coefficient alpha; X = dropped from model.

HEALTH-ENHANCING WORK ENVIRONMENT

		CE	NE	α_{CE}	α_{NE}	
				-	.57	
49	WU	-	.73		*	C/T employees take personal health seriously and maintain optimum fitness for work.
50	WU	1.00	.67		*	C/T employees observe safety rules. (FORCED LOADING)
				.74	.77	
125*	OE	.70	.44	*	*	Physical conditions (e.g., noise, temperature, lighting, cleanliness) make it easy for C/T employees to perform their jobs well .
126	OE	.81	.48	*	*	C/T employees are protected from health and safety hazards on the job.
128	OE	-	.84		*	Managers work to promote physical health in the workplace.
129	OE	-	.90		*	Managers work to promote psychological health in the workplace.

FAMILY/WORK/LIFE BALANCE

		CE	NE	α_{CE}	α_{NE}	
				-	.57	
61	WU	.15	.42		*	C/T employees do not allow personal activities to interfere with work (e.g., frequent absenteeism, lengthy personal phone calls). (FAMILY/WORK/LIFE BALANCE)
62	WU	.69	.69		*	Supervisors understand and support C/T employees' family and personal life responsibilities.
63	WU	-	.44		*	C/T employees actively seek to balance their commitments to work and their family and personal life needs to ensure that work gets done.
				.67	.76	
127*	OE	.58	.64	*	*	Programs that encourage good health practices are promoted (e.g., fitness centers, health education programs) .
130	OE	.65	.64	*	*	Programs that help C/T employees deal with work and family responsibilities are provided (e.g., employee assistance programs, support groups, stress management courses).
131	OE	.57	.60	*	*	Family-related benefits are available to C/T employees (e.g., parental leave policies, on-site child care, elder care).
132	OE	-	.74		*	There are policies and practices that help employees balance their work, family, and personal life needs.

TEAMWORK

		CE	NE	α_{CE}	α_{NE}	
				.81	.80	
73	WU	.72	.73	*	*	A spirit of cooperation and teamwork exists among C/T employees.
74	WU	.84	.82	*	*	A spirit of cooperation and teamwork exists among all employees in the work unit (e.g., C/T employees, professional employees, supervisors).
75	WU	.64	.64	*	*	C/T employees participate in teams to accomplish work unit goals.
				.78	.78	
148	OE	.55	.53	*	*	Different work units cooperate to get the job done.
149	OE	.62	.64	*	*	C/T employees in different work units participate in cross-unit teams to improve the quality of products and services, and to solve problems.
150	OE	.80	.86	*	*	Supervisors and managers recognize the contributions of teams.

(Continued)

Note. CE = Consortium Employees; NE = Nonconsortium Employees; WU = Work Unit Experiences scale; OE = Organizational Experiences scale. * by the item number = interrater agreement below .3; ** under the coefficient alpha = used in computing coefficient alpha; X = dropped from model.

RESOURCES UTILIZATION/ALLOCATION

		CE	NE	α_{CE} .75	α_{NE} .77	
47*	WU	.47	.42	*	*	C/T employees have enough work space to do their work.
51	WU	.59	.30	*	*	(R) Interruptions make it difficult for C/T employees to finish their work on time.
52	WU	.52	.33	*	*	(R) Having to get approval from others slows down C/T employees' work.
53	WU	.50	.30	*	*	C/T employees have the appropriate supplies, materials, and equipment to perform their jobs well.
54	WU	.65	.68	*	*	C/T employees are given reasonable goals and standards to meet.
55	WU	.43	.56	*	*	C/T employees have the right mix of skills and knowledge to accomplish work goals.
56	WU	.58	.59	*	*	Work is planned so that it can be accomplished during scheduled work hours.
57	WU	.50	.36	*	*	(R) The amount of work keeps C/T employees from providing high quality products and services.
58	WU	.56	.53	*	*	There is enough time for C/T employees to do their jobs in a professional manner.

SUPERVISION/MANAGEMENT

		CE	NE	α_{CE} .93	α_{NE} .94	
31	WU	.74	.75	*	*	Supervisors treat C/T employees with respect.
38	WU	.56	.64	*	*	C/T employees openly discuss their needs and concerns with supervisors.
64*	WU	.71	.71	*	*	Supervisors provide fair and accurate ratings of C/T employee performance.
65	WU	.75	.79	*	*	Supervisors provide C/T employees with constructive suggestions to improve their job performance.
66	WU	.71	.73	*	*	Supervisors clearly communicate what is expected of C/T employees in terms of job performance (e.g., task responsibilities, performance standards).
68	WU	.79	.83	*	*	Supervisors take the time to improve the job performance of C/T employees.
69	WU	.40	.47	*	*	Supervisors set high standards of performance for C/T employees.
70	WU	.82	.84	*	*	Supervisors build C/T employees' self-confidence.
71	WU	.70	.72	*	*	C/T employees receive help from their supervisors when there is a work-related problem.
72*	WU	.79	.81	*	*	There is trust between C/T employees and their supervisors.
35	WU	(.66)	(.69)	*	*	C/T employees are kept well informed on all issues affecting their job. LOADING ON OPEN COMMUNICATION FACTOR; DIMENSION COLLAPSED WITH SUPERVISION/MGMT
36	WU	·	(.65)		*	C/T employees participate in honest and forthright dialogue with supervisors. LOADING ON OPEN COMMUNICATION FACTOR; DIMENSION COLLAPSED WITH SUPERVISION/MGMT
37	WU	(.72)	(.65)	*	*	Information flows freely from supervisors to C/T employees. LOADING ON OPEN COMMUNICATION FACTOR; DIMENSION COLLAPSED WITH SUPERVISION/MGMT
67	WU	(.69)	(.78)	*	*	Supervisors clearly communicate to C/T employees the goals and priorities of the work unit. LOADING ON OPEN COMMUNICATION FACTOR; DIMENSION COLLAPSED WITH SUPERVISION/MGMT

(Continued)

Note. CE = Consortium Employees; NE = Nonconsortium Employees; WU = Work Unit Experiences scale; OE = Organizational Experiences scale. * by the item number = interrater agreement below .3; ** under the coefficient alpha = used in computing coefficient alpha; X = dropped from model.

OPEN COMMUNICATION

		CE	NE	α_{ce}	α_{ne}	
8	WU	-	.39			C/T employees share their knowledge with co-workers. (OTHER OPEN COMMUNICATION ITEMS IN THIS SCALE COLLAPSED WITH SUPERVISION/MANAGEMENT)
				.85	.87	
115	OE	.72	.72	*	*	Managers encourage C/T employees to express their own preferences, beliefs, and opinions.
118	OE	.78	.77	*	*	Managers promote effective communication between different work units (e.g., about projects, goals, needed resources).
119	OE	.72	.75	*	*	Managers openly communicate about the organization's conditions, operations, and choices it faces.
120	OE	.67	.70	*	*	Managers openly communicate about the organization's future plans.
121	OE	-	.47		*	C/T employees respect the confidentiality of organizational information that is shared by managers.
122	OE	-	.70		*	Information sharing occurs at all levels of the organization.

DIVERSITY

		CE	NE	α_{ce}	α_{ne}	
				.81	.87	
104	OE	.67	.66	*	*	Differences among C/T employees (e.g., sex, race, national origin, age, cultural background) are appreciated.
106	OE	-	.57		*	Managers see diversity as a source of stimulation and enrichment.
107	OE	.43	.44	*	*	Persons with disabilities are accepted and feel part of the organization.
108	OE	.55	.48	*	*	C/T employees value the racial and cultural differences of others.
110	OE	.37	.33	*	*	Accommodations are made for persons with disabilities (e.g., availability of sign language interpreters, ramps, braille).
111	OE	.59	.57	*	*	Personnel policies promote diversity in the workplace (e.g., recruiting minorities and women, training in awareness of diversity issues, mentoring).
112	OE	.76	.74	*	*	Supervisors and managers act to eliminate prejudice and discrimination. [304; 302 303 304,303 in the workplace].
113	OE	.47	.47	*	*	C/T Employees treat each other with courtesy and respect.
114	OE	-	.48		*	C/T employees feel responsible for preventing discrimination in the workplace.
116	OE	-	.71		*	Managers nurture self-expression and promote tolerance.
117	OE	-	.60		*	There are policies and practices that assure equality of employment and opportunity.

SOCIAL RESPONSIBILITY

		CE	NE	α_{ce}	α_{ne}	
				.77	.82	
133	OE	-	.69		*	There is a commitment to providing benefits to the social well-being of the community and nation.
135	OE	.49	.45	*	*	Managers encourage C/T employees to participate in charity campaigns sponsored by the organization (e.g., Combined Federal Campaign, holiday food drives).
136	OE	.63	.60	*	*	C/T employees who volunteer for community activities outside of work are supported and rewarded.
137	OE	.48	.54	*	*	There are policies and practices that reflect a commitment to preserving and restoring environmental health (e.g., recycling, pollution control).
138	OE	.46	.51	*	*	C/T employees assist the organization in meeting its commitment to preserving and restoring environmental health (e.g., participate in recycling).
139	OE	-	.52		*	C/T employees share public responsibilities as active citizens.
140	OE	.44	.45	*	*	C/T employees volunteer for community service and charity campaigns outside of work (e.g., Special Olympics, American Cancer Society).
134	OE	-	-	*	*	There is an organizational commitment to improving community life (e.g., partnerships with schools). LOADED ON FAMILY/WORK/LIFE BALANCE; MOVED TO SOCIAL RESPONSIBILITY DURING COEFFICIENT ALPHA RELIABILITY ANALYSIS FOR FACE VALIDITY

(Continued)

Note. CE = Consortium Employees; NE = Nonconsortium Employees; WU = Work Unit Experiences scale; OE = Organizational Experiences scale. * by the item number = interrater agreement below .3; ** under the coefficient alpha = used in computing coefficient alpha; X = dropped from model.

LEADERSHIP AND COMMITMENT TO QUALITY

		CE	NE	α_{CE}	α_{NE}	
				.89	.89	
93	OE	.76	.79	*	*	Managers inspire C/T employees to take pride in their work.
94	OE	.74	.77	*	*	Managers ask C/T employees about ways to improve the work produced.
95	OE	.75	.75	*	*	Managers follow up on C/T employee suggestions for improvements in products, services, and work processes.
96	OE	.68	-	*		Managers provide the resources (e.g., time, training, dollars) needed to improve the quality of products and services provided to customers.
98	OE	.71	.74	*	*	Managers communicate the organization's vision, goals, and values related to quality and high performance.
99	OE	.73	.75	*	*	Managers demonstrate that quality is important in their day-to-day activities (e.g., hold meetings to discuss quality issues, interact with customers).

JOB SECURITY AND COMMITMENT TO WORKFORCE

		CE	NE	α_{CE}	α_{NE}	
				.42	.68	
83	OE	-	.36			C/T employees give full value in their contribution to the organization (e.g., work at 100% capacity).
143	OE	.63	.61	*	*	Programs that help C/T employees deal with reductions in force are promoted (e.g., retraining, career counseling, aid in finding new jobs).
144	OE	-	.59		*	It is recognized that the economic security of the organization and that of its workforce are one and the same.
146	OE	.36	.44	*	*	C/T employees are provided with job security.
147	OE	-	.38		*	C/T employees recognize that their individual job security is linked to the long-term success of the organization.

STRATEGIC PLANNING

		CE	NE	α_{CE}	α_{NE}	
				.88	-	
151	OE	.69	-	*		Managers plan for the organization's future.
152	OE	.74	-	*		Managers set long-term quality improvement goals and objectives.
153	OE	.71	-	*		Managers regularly review the organization's progress toward meeting its goals and objectives.
154	OE	.64	1.00	*		C/T employees participate in planning for the organization's future (e.g., strategic plans, goals). (FORCED LOADING)
155	OE	.76	-	*		Managers develop and use strategies that continually adapt to the changing world.

MEASUREMENT AND ANALYSIS

		CE	NE	α_{CE}	α_{NE}	
				.87	-	
156	OE	.62	-	*		Information on quality and timeliness are collected on all products and services from customers.
157	OE	.63	-	*		Formal attempts are made to measure the extent to which the organization is meeting its goals and objectives.
158	OE	.58	-	*		The quality of products and services provided to customers is compared to the performance of other organizations that are recognized as successful.
159	OE	.55	-	*		Appropriate advanced technology and tools are used in all work processes and in information collection.
161	OE	.69	-	*		Comprehensive assessments of quality, quality systems and quality processes are performed at regular intervals across the organization.
162	OE	.71	-	*		Findings from the quality assessment process are used to improve quality and prevent problems.
163	OE	.58	-	*		Quality is the key factor used in selecting suppliers.

(Continued)

Note. CE = Consortium Employees; NE = Nonconsortium Employees; WU = Work Unit Experiences scale; OE = Organizational Experiences scale. * by the item number = interrater agreement below .3; ** under the coefficient alpha = used in computing coefficient alpha; X = dropped from model.

MISCELLANEOUS ITEMS (Not enough empirical evidence, based on LISREL and Coefficient Alpha analyses, to support assigning these items to any dimension)

		CE	NE	
9	WU	-	1.00	C/T employees respond to opportunities to gain new knowledge and develop new skills. (FORCED LOADING) (JOB SECURITY AND COMMITMENT TO WORKFORCE)
15	WU	.38	.30	(R) C/T employees find it difficult to change the way things are done. (INNOVATION AND RISK TAKING)
27	WU	1.00	1.00	Supervisors let C/T employees know how their work contributes to the organization's mission and goals. (FORCED LOADINGS) (LEADERSHIP AND COMMITMENT TO QUALITY)
42	WU	.09	.33	C/T employees take the initiative to meet work goals and deadlines. (EMPLOYEE INVOLVEMENT)
48	WU	X	X	(R) C/T employees feel work-related stress. (HEALTH-ENHANCING WORK ENVIRONMENT)
59*	WU	.28	.26	C/T employees are given the opportunity to work on flexible work schedules, when the job permits (e.g., Flexitime, Alternative Work Schedule, part-time employment). (FAMILY/WORK/LIFE BALANCE)
60	WU	.19	.27	C/T employees are given the opportunity to work at home, when the job permits (e.g., Flexiplace, work-at-home). (FAMILY/WORK/LIFE BALANCE)
105	OE	.34	.38	(R) Managers ignore minor acts of sexual harassment. (DIVERSITY)
145	OE	X	.31	C/T employees are willing to be retrained and moved to other positions in the organization to protect their employment security. (JOB SECURITY AND COMMITMENT TO WORKFORCE)

Note. CE = Consortium Employees; NE = Nonconsortium Employees; WU = Work Unit Experiences scale; OE = Organizational Experiences scale. * by the item number = interrater agreement below .3; ** under the coefficient alpha = used in computing coefficient alpha; X = dropped from model.