U.S. Department of Transportation
Administrative History Project
1993 - 2000

Supplementary Documents

- U.S. DOT Strategic Plan Brochure (January, 1994)
- U.S. DOT Strategic Plan1997-2002 (September, 1997)
  * Brochure; * Plan; * Mission/Vision Laminated Card
- U.S. DOT Strategic Plan 2000-2005 (July, 2000)
  * Plan; * Mission/Vision Laminated Card
- An Assessment of The U.S. Marine Transportation System, A Report to Congress (September, 1999)
- A Coast Guard For the Twenty First Century, Report of the Interagency Task Force on U.S. Coast Guard Roles and Missions (December, 1999)
  * Executive Summary; * Report
- Buckle Up America, The Presidential Initiative For Increasing Seat Belt Use Nationwide, First Report to Congress (January, 1998)
- Federal Railroad Administration, A Report to the Nation (October, 2000)
- Federal Highway Administration, Connecting America, 1999 Report to the Nation (May, 2000)
- United States Coast Guard, 1999 Report
- Leading the Way to Transportation Excellence in the 21st Century, Report to the Nation (May, 2000)
- A Summary, Transportation Equity Act for the 21st Century, U.S. DOT Brochure (1998)
- National Economic Crossroads Transportation Efficiency Act (NEXTEA), Key Information (March, 1997)
- List of Executed Full Funding Grant Agreements Since January 1993
- Celebrating the Federal Investment in Mass Transit: A Report to Our Customers, 2000
- This is the Federal Transit Administration (September 2000)

- Engineering Analysis EA92-041, General Motors Pickup Truck Defect Investigation (October 17, 1994) and Press Release announcing settlement (December 2, 1994)

- Pocket Guide to Transportation, Bureau of Transportation Statistics (Dec. 1999)

- List of U.S. Bilateral Civil Aviation Agreements

- Sample Open Skies Agreement

- List of Significant Rulemakings and Views letters

- Legislative Proposals of the U.S. Department of Transportation (1993--2000)

- List of Key DOT Testimony (1993-2000)

- Memorandum for the President from Secretary of Transportation Federico Peña, Accomplishments During Your First Term and Challenges Ahead (Dec. 9, 1996)

- List of Maritime Administration Title XI Loan Projects, FY 1994 - FY 2000

- U.S. DOT Organizational Charts for 1993 and 2000

- The Garrett A. Morgan Technology and Transportation Futures Program Flagship Report, 2000

- Biographies
  Secretary Rodney E. Slater
  Secretary Federico Pena
  Deputy Secretary Mortimer L. Downey
  Stanford E. Parris - SLSDC
  Gail C. McDonald - SLSDC
  David Sanders - SLSDC
  Albert S. Jacquez - SLSDC
  Craig Middlebrook - SLSDC
  Jane Garvey - FAA
  David Hinson - FAA
  Linda Hall Daschle - FAA
  John Graykowski - MARAD
  Vice Admiral Albert J. Herberger - MARAD
  Clyde J. Hart, Jr. - MARAD
  Asish Sen - BTS
  Kenneth R. Wykle - FHWA
  Gloria J. Jeff - FHWA
  Dr. Walter L. Sutton, Jr. - FHWA
  Kelley Coyner - RSPA

Dr. Dharmendra K. Sharma - RSPA
Dr. Sue Bailey - NHTSA
Dr. Ricardo Martinez - NHTSA
Admiral James Loy - USCG
Admiral Robert E. Kramek - USCG
Julie Anna Cirillo - FMCSA
Jolene Molitoris - FRA
Nuria Fernandez - FTA
Gordon J. Linton - FTA
Ken Mead - OIG
Mary Trupo - OST/A
William H. Schulz - OST/A
Steven J. Akey - OST/A
Richard Mintz - OST/A
Frank Kruesi - OST/P
Eugene Conti - OST/P – pending
Peter Jack Basso - OST/B
Louise Frankel Stoll - OST/B
Nancy E. McFadden - OST/C
Stephen H. Kaplan - OST/C
Michael J. Frazier - OST/I
Steven O. Palmer - OST/I
Melissa J. Allen - OST/M
Jon H. Seymour - OST/M
Francisco J. Sanchez - OST/X
Charles A. Hunnicutt - OST/X

Projected FFGAs Since January 1993				Date FTA Executed	Project Cost ($ Million)	Federal Share
9	CA	Los Angeles	Mid-City MOS-3	5/14/1993	$ 1,470	51%
2	NY	New York	Queens Blvd Line Connection	2/10/1994	$ 645	47%
3	MD	Baltimore	MARC Frederick Extension	11/1/1994	$ 132	80%
1	MA	Boston	S. Boston Piers Transitway	11/5	$ 413	80%
9	CA	Los Angeles	East Side MOS-3	12/1/1994	*	*
10	OR	Portland	Westside/Hillsboro	Dec-94	$ 964	65%
2	NJ	New Jersey	Secaucus Transfer	12/6/1994	$ 444	100%
4	GA	Atlanta	Metro Rail Ext. - North Spring	12/20/1994	$ 463	80%
6	TX	Houston	Regional Bus Plan	12/30/1994	$ 625	80%
8	UT	Salt Lake C	North-South LRT	8/2/1995	$ 313	76%
4	PR	San Juan	Tren Urbano	3/13/1996	$ 1,654	19%
8	CO	Denver	Southwest Corridor LRT	5/9/1996	$ 176	68%
2	NJ	New Jersey	Hudson-Bergen MOS-1	10/15/1996	$ 992	61%
7	MO	St. Louis	Metrolink St. Clair Phase 2A	10/17/1996	$ 339	72%
9	CA	Sacramento	South Corridor LRT Extension	6/10/1997	$ 222	50%
9	CA	San Francis	BART Ext to SFO Airport	6/30/1997	$ 1,483	51%
3	PA	Pittsburgh	Airport Busway	2/25/1999	$ 327	37%
6	TX	Dallas	North Central LRT Extension	10/6/1999	$ 517	64%
4	FL	Fort Lauder	Tri-Rail Commuter Rail	5/16/2000	$ 327	34%
9	CA	San Diego	Mission Valley East LRT Ext	6/22/2000	$ 431	77%
2	NJ	Newark	Rail Link MOS-1	8/2/2000	$ 208	68%
8	UT	Salt Lake C	CBD to University LRT	8/17/2000	$ 119	71%
10	OR	Portland	Interstate MAX LRT Extension	9/20/2000	$ 1,674	15%
2	NJ	Hudson-Ber	Hudson-Bergen MOS-2	10/31/2000	$ 1,113	65%
9	CA	San Jose	Tasman West LRT Project	7/2/96	$ 325	56%
9	CA	Los Angeles	North Hollywood MOS-3	Jul-97	$ 1,311	71%
4	FL	Jacksonville	People Mover Extension	9/1/1994	$ 109	40%

* Date is when Revised and Restated FFGA was executed. Original FFGA dates are: Pittsburgh (10/27/94), Jacksonvil

$ 16,796

U.S. Department of Transportation

News:

Office of the Assistant Secretary for Public Affairs
Washington, D.C. 20590

FOR IMMEDIATE RELEASE
Friday, December 2, 1994

DOT 168-94
Contact: Richard Mintz
Tel.: (202) 366-4570

SECRETARY PEÑA ANNOUNCES SETTLEMENT
IN GM PICKUP INVESTIGATION

Secretary of Transportation Federico Peña today announced a settlement of the government's investigation into alleged safety defects in General Motors C/K pickup trucks. Under the terms of the settlement, GM will provide $51.355 million to support safety programs that will prevent thousands of deaths and injuries. In return, the government will close the investigation.

"This settlement is a common sense outcome and a victory for safety. This settlement will save hundreds of lives -- far more than could ever have been saved by proceeding with a recall or closing the case," said Peña. "The alternative was to close the case with no public benefit or to proceed with a forced recall which would have involved years of litigation, an uncertain outcome, and prevented few, if any, deaths."

The Secretary said a scheduled three-day public meeting next week in Washington to obtain additional information in the case will not be held.

The National Highway Traffic Safety Administration (NHTSA) estimates that the expanded safety and research efforts supported by this settlement will save hundreds of lives and prevent thousands of injuries.

The settlement will allow for the purchase of an estimated 200,000 child safety seats for needy families that alone will save at least 50 lives and prevent 6,000 injuries. The settlement will allow for the dramatic expansion of research into burn and trauma treatment, automotive fire prevention, crash-test dummy development and driver impairment. Some $10 million will support drunk driving and seat belt education and advocacy efforts. GM also agreed to support enhanced industry-wide standards that will reduce the likelihood of fires in accidents.

-more-

- Awareness by the manufacturer of increased risk of post-crash fires at or after the time of design and efforts to eliminate or mitigate that risk.

- The criteria for evaluating whether an increased safety risk is unreasonable.

On October 17, Secretary Peña made an initial decision that a safety defect exists in 1973-87 model GM C/K pickup trucks with fuel tanks mounted outside the frame rails. In making the announcement, he found that based on the record at that time, these trucks demonstrated an increased safety risk and that the increased risk was unreasonable. Peña's initial decision was based on a technical analysis by the department's National Highway Traffic Safety Administration (NHTSA) demonstrating that since the trucks were introduced in 1973, there were approximately 150 fatalities in crashes that were otherwise survivable and that GM was aware of the increased risk associated with the design of the trucks but did not take steps to provide adequate protection.

The December 6 public meeting in Washington will allow interested parties the opportunity to provide additional information and arguments on the issues raised in this case. Parties interested in participating in the public meeting should contact the NHTSA Office of Defect Investigation by Nov. 28 at (202) 366-2850 or in writing to 400 Seventh St., S.W., Room 5326, Washington, D.C. 20590.

####

Copies of the letter and Federal Register notice may be obtained by calling (202) 366-5571.

U.S. Department of Transportation

News:

Office of the Assistant Secretary for Public Affairs
Washington, D.C. 20590

FOR IMMEDIATE RELEASE
Wednesday, November 30, 1994

DOT 167-94
Contact: Bill Adams
Tel.: (202) 366-5580

INSPECTOR GENERAL REPORT SAYS SECRETARY'S DECISION IN GM PICKUP CASE WAS WITHIN SCOPE OF HIS AUTHORITY

Completing its inquiry into the Department's process for reaching an initial determination in the GM C/K pickup case, the DOT's Office of Inspector General (OIG) today released its conclusion that the Secretary's decision was "within the scope of his authority and discretion" and that the deliberative process used in this matter was consistent with the Secretary's "decision-making relative to significant Departmental decisions."

The OIG report was prepared in response to a request from Representative Bob Carr, chairman of the House Appropriations Subcommittee on Transportation. Carr had asked the IG to look into the process of department's initial decision to recall the trucks.

The IG report determined that existing statutes clearly provided the Secretary's authority over all departmental operations including the National Highway Traffic Safety Administration (NHTSA) and its administrator and that the Secretary may exercise powers and duties delegated to other officials. "Our review of the act disclosed no applicable limitations to the Secretary's authority relative to his involvement in the GM defect investigation and his associated decision-making," the report noted.

The report also noted that the Secretary's initial decision was based, in part, on the view that, "because this is not a clear-cut case, he wants to err on the side of making the public fully aware of the issue and he believes a public hearing will contribute to that."

-more-

The IG's inquiry disclosed no contacts between departmental officials and non-government personnel other than those already on the public record and that there was no advance access by non-governmental personnel to the materials released on Oct. 17.

The investigation also confirmed earlier media reports that:

o The Secretary requested NHTSA to prepare two draft reports -- one to close the case, another to order a recall -- to aid him in the deliberative process. The report said, "Requesting two reports regarding the GM issue was ... consistent with the Secretary's normal decision-making practice."

o NHTSA Deputy Administrator Chris Hart made no recommendation in the case to the Secretary even though he was involved in preparing and editing the documents and providing technical expertise.

In the report, the Secretary told OIG that his involvement was predicated on two factors: the vacancies in the administrator and deputy administrator positions at NHTSA; and that it was a very important public policy issue for which he had been brought in very early on.

Due to Privacy Act and Freedom of Information Act considerations, the actual report cannot be released today, but a redacted version will be made available.

# # # #

U.S. Department of Transportation

News:

Office of the Assistant Secretary for Public Affairs
Washington, D.C. 20590

FOR IMMEDIATE RELEASE
Tuesday, November 15, 1994

DOT 162-94
Contact: Richard Mintz
Tel.: (202) 366-4570

DOT TO MOVE FORWARD
WITH PUBLIC MEETING
IN GM C/K PICKUP CASE

The Department of Transportation today announced that it will proceed with a scheduled December 6 meeting on the General Motors C/K pickup investigation and specified additional information it was seeking that could be useful in making a final decision to close the case or order a recall.

Public meetings "serve the important function of helping to further inform the department of additional relevant factual and legal matters before a final decision . . ." is made, said DOT General Counsel Stephen Kaplan in a letter to General Motors explaining the department's action. Last month, GM wrote to Secretary of Transportation Federico Peña requesting that the meeting be cancelled and that the case proceed directly to court.

". . . The Secretary feels that it is important to ensure that the public meeting in fact serves both to elicit relevant information and to provide a fair and balanced opportunity for all perspectives to be presented. Towards that end, the department today is submitting for Federal Register publication a notice requesting that interested persons desiring to appear at the meeting address certain identified issues which the Secretary views as helpful in reaching his final decision," the letter continued.

The Federal Register notice includes the following issues that the department asked to be addressed at the December 6 public meeting:

- Information supporting or refuting the technical analysis that an increased risk of fire, fatalities and injuries exists in the trucks.

-more-

The Secretary made the settlement decision consistent with his authority under the law. Earlier this week, the DOT Office of Inspector General concluded that the Secretary's involvement in this case was fully within the scope of his authority and discretion. The IG's report "disclosed no applicable limitations to the Secretary's authority relative to his involvement in the GM defect investigation and his associated decision-making."

Under the settlement, General Motors agreed to commit:

o $8 million for the purchase of child safety seats for low-income families. Between 1989-93, 1,376 unrestrained children four years old and younger were killed in passenger cars.

o to supporting enhanced industry-wide standards that will reduce the likelihood of fires in accidents. The goal will be to develop standards that reflect real-world conditions and withstand impacts of approximately 40 miles per hour.

o $11.855 million to education and advocacy efforts to strengthen drunk driving and seat belt laws and enforcement. By expanding specific and proven programs, NHTSA estimates that over 500 lives can be saved. Enhanced seat belt programs can save an additional 200 lives. Last year over 17,000 persons were killed in alcohol-related accidents.

o $10 million to establish and operate a fire-safety research laboratory. This research effort will focus on the development of new materials and test procedures for reducing the likelihood of post-crash fires.

o $5 million to expand research into treatment of burn and trauma victims.

o $5 million to improve computer-based design modeling of injuries and accidents.

o $5 million to human factors research, including the effects of alcohol, drugs, and aging on drivers.

o $6.5 million to support biomechanics research and the development of improved crash-test dummies to improve understanding of the impacts of crashes and how to design vehicles to more effectively protect people in the future.

GM also agreed to move to dismiss the case it brought against the government on Nov. 17.

Under the agreement, the Dec. 6 public meeting will not be held, and the government will close the investigation.

####

ENGINEERING ANALYSIS EA92-041

GENERAL MOTORS PICKUP TRUCK DEFECT INVESTIGATION

ENGINEERING ANALYSIS REPORT AND INITIAL DECISION THAT THE SUBJECT VEHICLES CONTAIN A SAFETY-RELATED DEFECT

October 17, 1994

062423

Table of Contents

Page

A. BACKGROUND 1

B. THE PETITION FOR A DEFECT INVESTIGATION 1

C. SCOPE OF THE INVESTIGATION 3

D. FEDERAL MOTOR VEHICLE SAFETY STANDARD NO. 301, "FUEL SYSTEM INTEGRITY" 3

E. DEVELOPMENT OF THE FUEL TANK SYSTEM IN THE SUBJECT VEHICLES 3

F. PREVIOUS INVESTIGATIONS AND RECALL 5
- F.1. EA74-259: Fuel Tank on 1974 Chevrolet Pickups 5
- F.2. EA90-015: Fuel Tank Corrosion on 1984 through 1986 GM C and K Pickups 6
- F.3. Recall 87V-002: 1984-1986 GM Chassis-Cab Vehicles 6

G. DESIGN, MATERIAL, AND/OR PRODUCTION MODIFICATIONS 7

H. COMPLAINTS 8

I. SUBJECT VEHICLE POPULATION 9

J. SERVICE BULLETINS 10

K. COMPLIANCE WITH FMVSS NO. 301 10
- K.1. Legal Issues 10
- K.2. GM Certification Testing 11
- K.3. ODI Testing Pursuant to FMVSS No. 301 Procedures 12

L. ADDITIONAL TESTING 12
- L.1. GM Crash Testing 12
- L.2. ODI Testing 13
- L.3. GM Comparative Crash Testing of Ford and GM Trucks 15

M. ADDITIONAL INFORMATION 16
- M.1. Corrosion 16
- M.2. Structural Integrity of the Subject Vehicles in a Side Impact 16
- M.3. Ignitability of Expelled Fuel 17
- M.4. Analysis of Specific Failure Modes 17

N. SAFETY RISK ANALYSIS 18
N.1. FARS Data 18
N.2. Validity of FARS Coding 22
N.3. GM/FaAA Analyses of FARS Data 24
N.4. Autopsy Data 25
N.5. The Usefulness of State Accident Data 26
N.6. The Effect of Driver Demographics and Behavior 29
N.7. Burn Injury Data 34

O. CRASH SEVERITY 36

P. THE REASONABLENESS OF THE FUEL SYSTEM DESIGN IN THE SUBJECT VEHICLES 40
P.1. GM's Awareness of the Potential Safety Consequences of Side-Mounted Fuel Tanks 40
a. Information Available to GM During the Design of the Subject Vehicles 40
b. Information That Became Available to GM During the Time the Subject Vehicles Were Being Produced 42
P.2. The Feasibility of Alternative Designs 44

Q. FINDINGS 45

R. CONCLUSIONS 47

062425

List of Tables

Number	Description	Page
Table 1.	Summary of Complaint Reports	8
Table 2.	GM Truck Production	9
Table 3.	Comparison of Side-Impact, Fire Fatality Rates in 1993 and 1994 Partyka Reports	20
Table 4.	1973 through 1991 GM C/K, R/V Estimated Remaining Registered Vehicles and Additional Burn Fatalities	21
Table 5.	FARS MHE Code Compared with Autopsy Cause of Death In Side-Impact, Fire-Related Crashes in Subject Vehicles	26
Table 6.	Fire and Crash Severity for Light Vehicle Side Crashes	27
Table 7.	Comparison of Side-Impact MHE=fire Occupant Fatality Rates for Various Model Years of Ford and GM Full-Sized Pickups	29
Table 8.	Crashes and Registered Vehicle Counts for Full-Sized Pickup Trucks for Three States in Selected Calendar Years	31
Table 9.	Distribution of Driver Fatalities in Side-Impact Crashes by Driver Age	33

062426

EXECUTIVE SUMMARY

This Engineering Analysis was opened on December 8, 1992, as a result of granting a petition from the Center for Auto Safety (CAS) and Public Citizen to "initiate a defect investigation into and recall all Chevrolet/GMC full-sized pickups (C/K-series) with fuel tank(s) . . . mounted outboard of frame rails." The objective of the investigation was to determine whether certain model year 1970-1991 Chevrolet and GMC full-sized pickup trucks contain a defect that poses an unreasonable risk to safety, related to the danger of fires following crashes, with primary focus on side-impact crashes. In the investigation, the National Highway Traffic Safety Administration's (NHTSA) Office of Defects Investigation (ODI) conducted analyses of real-world accident data and performed laboratory crash tests of the subject and peer vehicles. ODI also addressed questions related to the compliance of these trucks with Federal Motor Vehicle Safety Standard (FMVSS) No. 301, "Fuel System Integrity." Additionally, ODI examined whether the fuel tanks and related components on the trucks were unduly affected by corrosion that could make them more likely to be involved in a fire.

On April 9, 1993, ODI sent a recall request letter to General Motors Corporation (GM), recommending that GM conduct a safety recall on GM trucks with fuel tanks mounted outside the frame rails (subject vehicles). That letter was based on two principal factors:

1. Real-world accident data in the Fatal Accident Reporting System (FARS) indicate that there is an increased risk of fatality caused by fire in side-impact crashes involving the subject vehicles compared to 1973-1987 Ford full-sized pickup trucks. That increased risk led to an estimate that, in 1993, an additional 5-6 fatalities would occur in side-impact crashes involving the subject vehicles compared to what would occur if those trucks had the same side-impact fire performance as full-sized Ford pickups.

2. Laboratory crash tests corroborated the findings from the real-world accident data analysis. That is, in certain comparable side-impact crash tests, GM fuel tanks leaked and Ford tanks did not. Further, these tests used instrumented test dummies. Dummy measurements indicate that humans could have survived the crash forces at the impact speeds at which the subject vehicles leaked. While these speeds are well in excess of the impact speed specified in FMVSS No. 301, the results indicate the increased fire risk in the GM trucks in crashes that are otherwise survivable.

GM provided an extensive amount of data and arguments in response to the recall request letter. ODI has completed an exhaustive review and analysis of the GM submissions and has conducted a variety of additional analyses associated with issues involved in this investigation. These include:

- an assessment of the effect of corrosion on fuel tank leakage and fire performance in the subject vehicles;

- an analysis of non-fatal burn injuries in side-impact crashes involving the subject vehicles;

062428

- an in-depth review of all available police accident reports and other records of side-impact, fire-involved fatal crashes involving the subject vehicles to assess the crash conditions and severity of each;

- an update of the FARS analysis that led to the April 9, 1993 recall request letter;

- an analysis of the reasonableness of GM's decision to design the subject vehicle with side-mounted fuel tanks, given what GM knew about the safety risks associated with that design and the availability of feasible alternative designs; and

- an analysis of the information about the risk of post-crash fuel leaks that became available to GM during the time the subject vehicles were being manufactured.

<u>Principal Findings</u>:

- A review of GM submissions, as well as ODI testing, indicates that there are no data on which to conclude that the GM trucks to which FMVSS No. 301 applied, when new, did not comply with the standard.

- There are no data to indicate a relationship between fuel tank corrosion and increased fire risk in the subject vehicles, either in side impacts or in non-crash incidents.

- Apart from the basic decision to locate the fuel tanks of the subject vehicles outside of the frame rails, many of the specific features of the design of the fuel storage system and the surrounding area have increased the likelihood of post-crash fuel fires in the subject vehicles.

- Based on a review of 1979-1993 accident data reflecting the performance of full-sized pickups in side-impact fatal crashes involving fire, occupants of the subject vehicles experienced 2.8 times as many fire-related fatalities (i.e., fatalities in crashes in which a fire occurred) per million registered vehicle-years as occupants of Ford pickups and 2.5 times as many as occupants of Dodge pickups. Where the FARS code indicated that the most harmful event (MHE) of the crash was fire, the GM-to-Ford occupant fatality per million registered vehicle-years ratio is 3.4 to 1, and the GM-to-Dodge ratio is 6.1 to 1.

- Real-world accident data do not support GM's contention that GM and Ford pickup trucks have comparable side-impact fire performance and that differences in driver demographics and driver behavior explain the difference in the rates of fire-related and MHE=fire fatalities in side-impact crashes for the GM and Ford pickups. This is demonstrated by the tremendous reduction in the rate of MHE=fire side-impact fatalities that occurred after GM moved the fuel tanks for these pickups inside the frame rails in model year 1988.

- Contrary to GM's contentions, the MHE coding in FARS is a reliable indicator of the number of fatalities actually caused by fire.

002429

- FARS data indicate that, if past trends continue, there would be approximately five additional fatalities due to fire in side-impact crashes in 1994 compared to what would occur if the subject vehicles had the same side-impact fire performance as Ford full-sized pickups.

- Reports of non-fatal burn injuries indicate that, if past trends continue, there would be three to four additional non-fatal burn injuries in 1994 in side-impact crashes involving the subject vehicles compared to the Ford pickups.

- Laboratory crash data indicate that, at certain impact speeds and configurations, the subject vehicles will leak fuel in side impacts, while comparable Ford pickups will not.

- While the crash severities in fatal side-impact, fire-involved crashes involving the subject vehicles are far in excess of the severity specified in FMVSS No. 301, they are generally less than the severities that result in fires in fatal side-impact crashes involving the Ford pickups.

- GM was aware at the time it designed the subject vehicles in the early 1970s that side-mounted fuel tank design presented an increased risk of post-crash fuel fed fires in side impacts, compared to the risk associated with other feasible alternative designs. Moreover, GM obtained additional information demonstrating the increased risk associated with the side-mounted tanks during the 15-year period the subject vehicles were in production.

<u>Principal Conclusions</u>:

- The increased risk of death and injury from fire in side-impact crashes involving the subject vehicles is a result of the design of their fuel storage system, primarily the location of the fuel tanks outside of the frame rails, supplemented by other features of the design.

- Given the state of the art at the time and GM's awareness of the likely consequences, it was unreasonable for GM to design the subject vehicles with fuel tanks outside the frame rails.

- The increased safety risk due to post-crash fires in the subject vehicles is unreasonable.

Therefore, on the basis of the entire investigative record, I have initially decided, pursuant to 49 U.S.C. § 30118(a) (formerly section 152(a) of the National Traffic and Motor Vehicle Safety Act), that the subject vehicles contain a defect that relates to motor vehicle safety.

062430

ENGINEERING ANALYSIS EA92-041
GM TRUCK DEFECT INVESTIGATION

A. BACKGROUND

This Engineering Analysis was opened to investigate whether General Motors (GM) 1970-1991 full-sized pickup trucks and chassis-cabs with fuel tanks located outside the frame rails (the subject vehicles) contain a "defect which relates to motor vehicle safety" within the meaning of section 152 of the National Traffic and Motor Vehicle Safety Act (the Act), recently recodified as 49 U.S.C. § 30118. Under the Act, "defect" is defined to include "any defect in performance, construction, components, or materials in motor vehicles," while "motor vehicle safety" is defined as "the performance of motor vehicles . . . in such a manner that the public is protected against unreasonable risk of accidents occurring as a result of the design, construction or performance of motor vehicles and is also protected against unreasonable risk of death or injury to persons in the event accidents do occur . . . ." The alleged defect relates to the performance of the subject vehicles in protecting against post-crash fuel leaks and fire in crashes, with primary focus on side-impact crashes.

This investigation has, from the outset, been different from the majority of safety defect investigations conducted by ODI. First, it involves a "crashworthiness" aspect of vehicle performance, while most of ODI's defect investigations involve "crash avoidance" issues; e.g., braking problems, steering problems, etc. In addition, in most investigations, the alleged defect involves a system or component that does not function the way it was designed, e.g., "a broken part." In such investigations, the alleged defect often appears in only a small percentage of the vehicles under investigation, and ODI's initial inquiry is on how many of the vehicles covered by the investigation have experienced the alleged defect. Only if the defective condition exists in more than a de minimis number of vehicles does ODI proceed to analyze whether the defect relates to motor vehicle safety.

In this case, since the alleged defect is inherent in the design of the fuel storage system of the subject vehicles, all of the subject vehicles have the alleged defect. Thus, the issue of whether the vehicles have a safety-related defect turns on the issue of whether that design creates an "unreasonable risk of death or injury to persons" in the event of a crash.

B. THE PETITION FOR A DEFECT INVESTIGATION

In a letter dated August 14, 1992, CAS and Public Citizen petitioned NHTSA to "initiate a defect investigation into and recall all Chevrolet/GMC full-sized pickups (C/K-series) with fuel tank(s) . . . mounted outboard of frame rails." The petitioners alleged that, because of the location of the tanks, "there is no frame member to protect the tank from crush in side

impact or sideswipe." The petitioners further alleged that GM concealed that it was aware of a design defect and continued to market vehicles with this design through 1987.[1]

Included with the petition were brief descriptions of 51 incident reports allegedly involving fuel tank fires in pickup trucks, including the subject vehicles. Of those incidents cited by the petitioners, 19 involved full-sized GM pickup trucks and/or chassis-cabs with side-mounted fuel tanks. However, based on the information provided in two of these 19 incidents, the agency cannot determine whether the side-mounted fuel tank was compromised. Eighteen involved GM vehicles outside the scope of the investigation (passenger cars, pre-1973 trucks, and heavy duty trucks). Another 13 involved non-GM vehicles. Additionally, the year/make/model of one vehicle could not be determined.

In three subsequent letters, dated September 14, October 5, and November 13, 1992, the petitioners identified additional lawsuits and provided arguments and supporting data, including the contention that the subject vehicles "do not comply with Federal Motor Vehicle Safety Standard No. 301." The petitioners also presented deposition testimony from Mr. Ronald Elwell, a former GM engineer, who testified about crash tests conducted by GM on these vehicles in the early 1980's. The petitioners alleged that, "as Mr. Elwell's depositions show, these tests clearly revealed the hazards of the side tanks outside the frame because the tanks of the test vehicles ruptured like split melons." Subsequent submissions by the petitioners concerning the investigation are also in the public file.

Upon receipt of the petition, ODI wrote a letter to GM to request information on relevant vehicle production volumes, vehicle testing, consumer complaints, accidents, fatalities, injuries, and lawsuits. The agency also sent letters to Ford Motor Company (Ford) and Chrysler Corporation (Chrysler) to obtain comparable information, such as crash test reports, complaint data, and lawsuits, about "peer" full-sized pickup trucks. In addition, ODI initiated an analysis of accident data files to assess the performance of these trucks in real-world crashes and began a series of crash tests.

Based on the petition and its supplements, manufacturer responses, real-world accident data analysis, and crash tests conducted by ODI, the petition was granted on December 8, 1992, and this engineering analysis was opened.

---

[1] The public file for this investigation is divided into a defect petition file (DP92-016), which contains the documents received or prepared by ODI during its consideration of the petition for a defect investigation (i.e., between August 14, 1992 and December 8, 1992), and an Engineering Analysis file (EA92-041), which contains the documents received or prepared by ODI after the petition was granted. The pages of the documents in the EA file are numbered consecutively and cumulatively in a "Bates" numbering system, and page references in this Report to such documents will be to their six-digit Bates page number. Each separate document and exhibit in the DP file has its own individual number, based on its date of receipt, but they were not given cumulative page numbers. Thus, page references in this Report to such documents will be to their DP document or exhibit number (where applicable) and to their own internal pagination.

C. SCOPE OF THE INVESTIGATION

- The "subject vehicles" are all model year 1973 through 1991 full-sized GM pickup trucks and cab-chassis (through the 30/3500 series) equipped with fuel tank(s) mounted outboard of the main frame rails. For model year 1970 through 1986, GM labeled the two-wheel (2wd) drive truck as a C model and the four-wheel (4wd) drive as a K model. Starting in 1987, the C and K model names were changed to the R and V model names, respectively, for vehicles equipped with fuel tanks outside the frame rails. The R and V models continued through 1991.[2] GM rates the truck's carrying capacity as ½-ton (Chevrolet 10 series, GMC 15 series, and Chevrolet/GMC 1500 series), ¾-ton (Chevrolet 20 series, GMC 25 series, and Chevrolet/GMC 2500 series), and 1-ton (Chevrolet 30 series, GMC 35 series, and Chevrolet/GMC 3500 series).

- The alleged defect is any failure, malfunction, or performance of the fuel storage system in the subject vehicles that results in, or could result in, fuel leakage and/or fire as a result of a vehicle crash.

D. FEDERAL MOTOR VEHICLE SAFETY STANDARD NO. 301, "FUEL SYSTEM INTEGRITY

NHTSA established FMVSS No. 301, "Fuel System Integrity," to "reduce deaths and injuries occurring from fires that result from fuel spillage during and after motor vehicle crashes" (49 CFR § 571.301). The standard addresses fuel system integrity in various crash modes, including side-impact, by limiting the amount of fuel that may leak during and after the crash test. Originally, only passenger cars had to conform with the FMVSS No. 301 requirements. However, beginning with the 1977 model year, light trucks (including the subject vehicles) had to comply with FMVSS No. 301 requirements for 30-mph frontal impacts. Trucks with a Gross Vehicle Weight Rating (GVWR) of 6,000 lbs or less also had to comply with requirements for 30-mph rear impacts. The following model year, 1978, the 20-mph side and 30-mph rear-impact requirements also became applicable to all vehicles of 10,000 lbs GVWR or less, including the subject vehicles.

E. DEVELOPMENT OF THE FUEL TANK SYSTEM IN THE SUBJECT VEHICLES

The fuel tanks in the subject vehicles are mounted outboard of the main frame rails, as shown in Figure 1. Prior to 1973, the standard fuel tank in GM's full-sized pickups was located inside the vehicle cab (Figure 2). Beginning in 1970, owners could have Chevrolet or GMC dealers install one or two 18.5 gallon auxiliary tanks outside of the frame rails. Also in 1971, there was a factory-installed optional auxiliary tank which could be located behind the rear axle between the frame rails. GM stated in its October 9, 1992 response to ODI's first information request (DP #12, at page 40), that this was offered to provide

---

[2] Since model year 1988, GM has used the C and K model designation for its newly-designed trucks with fuel tanks located inside the frame rails.

additional fuel capacity. With the 1971 model year, GM offered production option NL2, which was a GM factory-installed (as opposed to dealer-installed) 19-gallon auxiliary fuel tank located outside the driver's side frame rail.

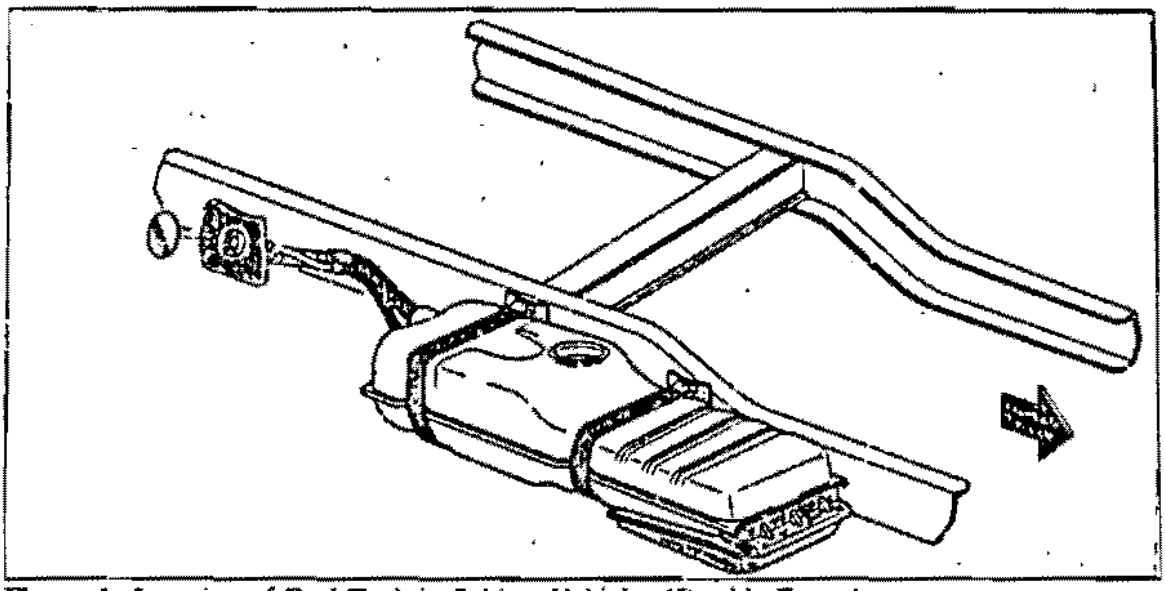

Figure 1. Location of Fuel Tank in Subject Vehicles (Outside Frame)

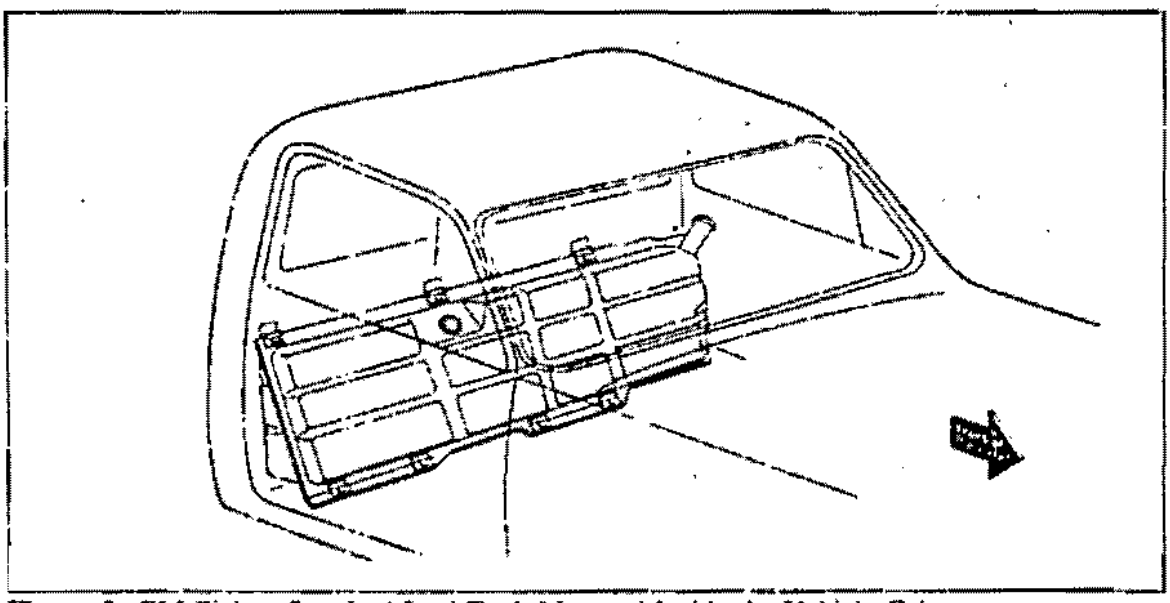

Figure 2. GM Pickup Standard Fuel Tank Mounted Inside the Vehicle Cab (Model Year 1972 and Earlier)

For model year 1973, GM redesigned the entire C/K truck for the first time since model year 1963. Depending upon wheelbase and equipment chosen, these vehicles were equipped with single or dual 16- or 20-gallon fuel tanks. All vehicles came equipped with a standard tank located outside the right (passenger side) frame rail. Those purchasers choosing to increase fuel capacity could order an optional fuel tank which was mounted outside the left (driver side) frame rail. The optional tank's capacity always matched that of the standard tank, i.e., GM never offered C/K's with a 16-gallon tank on one side and a 20-gallon on the other. In the model year 1981 trucks, GM moved the standard fuel tank location from outside the right frame rail to outside the left frame rail. The optional fuel tank was then placed outside the right frame rail.

When designing the 1973 truck, GM provided enough fuel capacity to permit a range of 400 miles. At that time, GM anticipated the vehicles would average approximately 10 miles per gallon and thus made available up to 40 gallons of fuel capacity. According to GM (October 9, 1992 response (DP #12) at page 40), it did this, "to meet the needs of GM customers, who had been demanding additional fuel capacity since the late 1960's."

Beginning in model year 1981 GM offered the trucks with a standard 16-gallon tank (short wheelbase) and 20-gallon tank (long wheelbase) mounted outside the left frame rail. If additional fuel capacity was desired by the purchaser, GM provided dual 16-gallon tanks for pickups rated at less than 8,600 lbs. GVWR and dual 20-gallon tanks for pickups rated at 8,600 lbs. GVWR and higher.

F. PREVIOUS INVESTIGATIONS AND RECALL

F.1. EA74-259: Fuel Tank on 1974 Chevrolet Pickups

In early 1974, ODI received a letter from the West Virginia Governor's Highway Safety Administration, regarding the puncture of a fuel tank on a 1974 pickup truck. The letter stated that the fuel tank located on the right-hand side of a 1974 Chevrolet pickup truck leaked as a result of being struck by flying debris as the truck passed another vehicle. The writer expressed concern that, although a guard was provided for most of the tank, this guard did not cover the complete tank, and alleged that the design constituted a safety hazard.

ODI found that a plastic shield was attached to the seam welded flange on the front of the tank and was bolted to a bracket mounted to the frame. ODI analyzed the complaint from the standpoint of the degree of protection that the plastic shield provided from damage caused by stones thrown up as the truck drove down a highway. At that time, ODI had no other complaints on this issue. Based on the lack of complaints and no indication of a possible defect trend, the investigation was closed on June 6, 1974.

F.2. EA90-015: Fuel Tank Corrosion on 1984 through 1986 C and K Pickups

On March 20, 1990, ODI opened an investigation concerning alleged corrosion of the fuel tanks in GM's 1984 through 1986 C/K pickup trucks. The plastic shield, which covered the bottom, front, and back of the tank, was collecting road debris, such as mud and sand, thus allowing moisture retention around the tank. It was alleged that this resulted in increased corrosion and fuel tank leakage.

No accidents, fires, lawsuits, or injuries were reported as a result of this alleged defect. ODI received 28 complaints, and GM forwarded 132 complaints during the investigation. There were no warranty claims, since the tanks usually corroded at high mileage.

During the investigation, the agency conducted a survey of vehicles in the Columbus, Ohio, area. Twelve vehicles were examined. Of those 12, 2 were found to be weeping fuel when the shield was removed, but the leak was so small that it was unmeasurable.

ODI also contracted with Calspan Corporation to have a telephone survey performed. This survey of 381 owners in six states obtained information related to fuel tank leakage. The purpose of the survey was to determine the number of owners who had experienced a problem with fuel tank leakage or noticed odors of fuel from the tank area of the vehicle. The owners were located in the states of Florida, Louisiana, Michigan, Minnesota, Missouri, and Texas. The survey found that 11.8 percent (45 out of 381) of the owners reported their vehicles had a fuel tank replaced due to corrosion. An additional 14 owners reported noticing fuel leakage, but had not replaced the tank. The average mileage of the vehicles with replaced tanks was approximately 94,700 miles and the average age was 7 years.

The investigation was closed on February 24, 1992 because the complaint rate was low, the average mileage and age of vehicles with leakage was high, and there were insufficient data to indicate the presence of a safety-related defect.

F.3. Recall 87V-002: 1984-1986 GM Chassis-cab Vehicles

In January 1987, GM recalled 61,668 1984-1986 Ton chassis-cab trucks to install a plastic shield over the nose of the fuel tank(s) to prevent the "sled runner" (a structural rib intended to strengthen the cab floor) from puncturing the upper right corner of the fuel tank in a crash. GM discovered this condition as a result of its crash test C-6514 conducted on April 22, 1986. In that test, a C-30 chassis-cab equipped with a low service body (similar to what utility companies use) was subjected to a 30 degree oblique frontal impact at 30 mph, consistent with the test conditions required by FMVSS No. 301. The vehicle test weight was 8,500 lbs. The test resulted in leakage when, due to vehicle crush and frame deformation, the fuel tank was punctured by the sled runner.

An earlier crash test conducted by GM (test number C-4308, October 18, 1977) had resulted in a fuel tank failure due to a sled runner-to-tank puncture in a C-30 test vehicle ballasted to an 8,500 lb. test weight. The problem was corrected at that time through the installation of a plastic shield over the leading edge of the fuel tank. The efficacy of this shield was then

confirmed during tests C-4350, C-4351, and C-4360 (conducted between December 1977 and January 1978) when no tank puncturing was observed at a vehicle test weight of 8,500 lbs. Based on GM's engineering judgment, all 1978 through 1993 C-30 chassis-cabs were certified to comply with FMVSS No. 301 when tested at their maximum test weight of 8,500 lbs. On May 15, 1986, GM Truck and Bus Engineering reported that a possible noncompliance with FMVSS 301 existed on certain chassis-cab models. On January 15, 1987, GM notified NHTSA that it would conduct a safety recall (87V-002) to address this noncompliance.

On April 19, 1993, ODI sent an information request to GM to gather pertinent information relating to the 1987 recall and to ascertain whether it might be related to the current investigation. GM responded on May 14, 1993. In summary, GM stated that due to an engineering oversight, the sled runner shield had been omitted from the 1984-1986 C-30 chassis-cabs, thus necessitating the 1987 recall.

G. DESIGN, MATERIAL, AND/OR PRODUCTION MODIFICATIONS

Throughout the production run of the subject vehicles, GM made a number of changes to the design of the fuel system. A detailed description of these design changes is contained in the public file for this investigation. The following summarizes the most significant changes.

- Model year 1975—the filler neck was changed to meet evaporative emission requirements. The new filler neck had a built-in trap door nozzle restrictor to prevent the use of service station nozzles that dispense leaded gasoline. Also, the fuel system was sealed and vented to a charcoal canister.

- Model year 1978—a flange was added to both lower rear corners of the cab to improve fuel system integrity in side impacts.

- Model year 1979—the filler cap and filler neck were recessed behind a body panel door.

- Model year 1980—a "radius" was added to both lower rear corners of the cab to improve fuel system integrity in side impacts.

- Model year 1981—the standard fuel tank location was changed from the right side to the left side, and the optional tank location was changed from the left side to the right side.

- Model year 1984—the tank supports were modified, a new plastic shield was added to improve performance in side impacts, and a new filler neck support housing was added.

H. COMPLAINTS

ODI has received and analyzed reports from a variety of sources (including GM) concerning fuel tank failures that occurred due to impact and/or corrosion. Where possible, ODI has attempted to compare complaints received from these sources with the data contained in NHTSA's Fatal Accident Reporting System (FARS) (a census of fatal crashes from 1975 forward). In some cases, reconciliation is not possible due to the nature of the information, e.g., the accident did not involve fatalities, or occurred so recently that it has not yet been entered into FARS. The information in this section is current through April 1, 1994.

ODI has reviewed information about 555 accidents that appear to be relevant to this investigation; i.e., the report involves at least one C/K truck with fuel tanks located outside the frame rails, and fuel leaked from the C/K's fuel tank(s). In addition, ODI has also received complaints of fuel tank corrosion. However, none of these allege a vehicle fire. The corrosion reports are discussed in detail in section M.1.

Table 1 shows the number of reported incidents involving the alleged defect from January 1973 through April 1994 that have been received from all sources, with duplicate reports removed.

Table 1. Summary of Complaint Reports

	GM	Other Sources	TOTAL
Accidents with Fuel Leak	525	30	555
Fuel Leak, Fire	480	30	510
Fuel Leak, No Fire	30	0	30
Fuel Leak, Fire Unknown	15	0	15
Non-Fatal Burn Injuries (Accidents/Injuries)	103/156	2/2	105/158
To Truck Occupants (Accidents/Injuries)	86/127	2/2	88/129
To Striking Vehicle Occupants (Accidents/Injuries)	17/29	0/0	17/29

In addition to the complaints reflected in the above table, ODI has reviewed FARS data reflecting a total of 284 fire-involved, side-impact fatal crashes involving a subject vehicle that occurred during the period 1975-1993. Those 284 crashes resulted in 341 fatalities to occupants of the subject vehicles and 29 fatalities to occupants of the striking vehicle, for a total of 370 fire-related fatalities.

I. SUBJECT VEHICLE POPULATION

GM produced 9,219,248 of the subject vehicles from model year 1973 through 1991. GM was unable to state how many 1970 through 1972 trucks were equipped with the optional auxiliary tank located outside of the frame rail(s). Additionally GM was unable to state how many of the 1973 through 1979 trucks were equipped with dual fuel tanks, but did provide dual tank populations for 1983 through 1991 model years. Beginning with model year 1988, the standard tank location was inside of the frame rails for all pickups except for certain ¾ and 1-ton chassis-cab trucks, which retained the prior design with the tank location outside of the frame rails. Table 2 shows the number of subject vehicles produced from model year 1973 through 1991. The vast majority of subject vehicles (9,148,686) were produced from model year 1973 through 1987.

Table 2. GM Truck Production

Model Year	Production
1973	748,068
1974	737,448
1975	575,684
1976	792,734
1977	914,784
1978	928,954
1979	899,592
1980	478,932
1981	487,165
1982	416,196
1983	380,199
1984	488,782
1985	513,280
1986	478,468
1987	308,400
1988	30,533
1989	24,212
1990	7,325
1991	8,492
TOTAL	9,219,248

Based on vehicle registration data obtained from the R.L. Polk Company (R.L. Polk), ODI estimates that as of July 1, 1994, 4.8 million of the subject vehicles were in use on U.S. highways.

J. SERVICE BULLETINS: GM issued no service bulletins related to the alleged defect.

K. COMPLIANCE WITH FMVSS NO. 301

As noted in section B, the petitioners claimed that the subject vehicles "do not comply with Federal Motor Vehicle Safety Standard No. 301." To address the compliance issue, ODI requested GM's certification data to assess its basis for certifying compliance with FMVSS No. 301. In addition, ODI conducted a series of side-impact tests under the procedures specified in FMVSS No. 301 to further assess this issue. As noted in section D, FMVSS No. 301 specifies limits of fuel leakage from vehicles when tested in frontal, side and rear barrier impacts. For side impacts, FMVSS No. 301 requires that the vehicle be impacted laterally on either side by a flat-faced barrier moving at 20 mph. In side impacts, the barrier face is parallel to the longitudinal axis of the vehicle. The barrier is 24¾ inches high, 78 inches wide, has a ground clearance of 5 inches, and weighs 4,000 lbs. The vehicle's fuel tank is filled to between 90 and 95 percent of capacity with stoddard solvent, a liquid that has similar characteristics to gasoline, but is much less flammable. In accordance with FMVSS No. 301, two uninstrumented test dummies are positioned in the outboard seating positions for these tests. Fuel spillage may not exceed 1 ounce by weight from impact until motion of the vehicle has ceased, and shall not exceed a total of 5 ounces by weight in the 5-minute period following cessation of motion. For the subsequent 25-minute period following cessation of motion, fuel spillage during any 1-minute interval may not exceed 1 ounce by weight.

The majority of C/K trucks covered by this investigation were required, when new, to comply with the requirements of FMVSS No. 301.

K.1. Legal Issues

GM has contended that because the subject vehicles comply with FMVSS No. 301, and because safety standards must "meet the need for motor vehicle safety," NHTSA lacks the authority to determine that they contain a safety-related defect. NHTSA disagrees.

Under the Safety Act, all vehicles, when new, must comply with all applicable Federal motor vehicle safety standards. The Act defines motor vehicle safety standards as "minimum standards for motor vehicle performance . . ." (emphasis supplied). Moreover, NHTSA's concerns are not limited to whether a product complies with safety standards when new, but also include whether it protects the driving public against an unreasonable risk of accidents, injuries, and death throughout its lifetime. The provisions of Part B of the Act, authorizing recalls to correct safety defects as well as noncompliances, supplement and complement the statutory provisions for adoption and enforcement of safety standards to maximize the protection of the public.

Under 49 U.S.C. § 30111 (formerly section 103 of the Safety Act, NHTSA's safety standards must be "practicable," "meet the need for motor vehicle safety," and be stated in "objective terms." They must also be "reasonable, practicable, and appropriate for the particular type of motor vehicle" for which they are prescribed.

It is impossible to promulgate standards that will ensure that all designs and manufacturing processes do not create unreasonable safety risks. Nor can standards for new vehicles completely guard against designs or processes which, over time, lead to unreasonable risks to the driving public, because of factors such as manufacturing flaws, deterioration, or the manner in which vehicles are operated. It is also impossible to ensure that laboratory tests adequately represent all real-world crash circumstances. Thus, even if a vehicle's fuel system did not leak under the specific test conditions set out in FMVSS No. 301, it might still present an unreasonable safety risk under different real-world crash conditions. If a particular aspect of a vehicle's design or performance appears to create an unusually high risk of accidents, deaths, or injuries, it is appropriate for the agency to investigate whether the vehicle contains a safety defect.

K.2. GM Certification Testing

GM provided information detailing the basis for its certification that these vehicles complied with the applicable requirements of FMVSS No. 301 in its responses of October 9, 1992, January 29, 1993, and April 30, 1993. In summary, the GM information indicated the following. Since FMVSS No. 301 side-impact requirements were not applicable to light trucks prior to model year 1978, no side-impact certification testing was performed for earlier model years.[3] For the 1978 model year, GM conducted four right side and three left side tests. For model year 1979, GM conducted six tests, all to the right side, stating "the fuel tank installations are symmetrical side to side. Thus, a successful test on one side would indicate compliance of the fuel tank of the other side of the vehicle." However, GM conducted a seventh test (C-4421), the vehicle sustained 7.6 ounces of fuel leakage in the first five minutes following the side impact. Although GM certified compliance on the basis of the six passing tests, the seventh test led GM to develop a design change to "increase the margin of compliance with the side-impact requirements of FMVSS No. 301" for vehicles manufactured late in calendar year 1979 (for model year 1980) and afterward. For model year 1980, one side-impact test was performed on the right side with no fuel leaks. For model year 1981, GM performed one right and two left-side tests with no leaks. For model year 1982, there was one left-side test, with no leak. One left side test was conducted for each of model years 1983 and 1984 with no leakage noted. No side tests were performed for model year 1985 through 1990 trucks. GM stated that there were no changes made which would affect compliance with the standard. A thorough description of GM's compliance

---

[3] In anticipation of the effectiveness of FMVSS No. 301, in October 1975, GM conducted a side-impact test pursuant to the procedures of the standard on a 1975 C pickup truck that resulted in a leak (Test C-3701). In response to that test, and other analysis, GM modified the design of the subject vehicles to add a flange to the lower rear corners of the cab prior to the effective date of the side-impact portion of the standard.

testing and test results is contained in GM's October 9, 1992 response (DP #12 at 17-28). A summary is contained in Appendix I-D to GM's April 30, 1993 letter.

K.3. ODI Testing Pursuant to FMVSS No. 301 Procedures

Five subject and two peer vehicles were tested for ODI by the Vehicle Research and Test Center (VRTC) in East Liberty, Ohio, in accordance with the side-impact test procedures set out in FMVSS No. 301. These tests were conducted on vehicles up to 11 years old in an effort to assess performance in FMVSS No. 301 test conditions. Six vehicles (four subject and two peer) were tested with "as received" fuel tanks. A new fuel tank was installed in one other GM vehicle (a 1985 model) for testing. The tests were conducted at 20 mph with the test conditions specified in the standard, except that no static rollover subsequent to impact was performed on the first two vehicle tests. Rollovers were performed on the remaining five test vehicles. ODI's "Crash Test Protocol" for the FMVSS No. 301-type tests appears at EA 009040. The results of the testing program are described in a VRTC report, "Summary of the Crash Test Program Concerning Fuel Tank Integrity of Full-size Pickup Trucks," June 1993 (EA 005812).

Two of the four "as received" GM vehicles and the one GM vehicle tested with a new tank satisfied the side-impact fuel leakage requirements of FMVSS No. 301. The third "as received" GM truck leaked stoddard solvent from the engine compartment during the post-crash rollover. The fourth "as received" vehicle, a 1982 truck, sustained a fuel tank leak from underneath the forward tank strap. Further examination indicated that the leak resulted from fuel tank corrosion.

Based on the results of these five side-impact "compliance" tests on vehicles up to 11 years old, as well as the 20 "certification tests" submitted by GM, there are no data on which to conclude that the subject vehicles to which the standard applied, when new, did not comply with FMVSS No. 301.

L. ADDITIONAL TESTING

L.1. GM Crash Testing

GM conducted several series of fuel system integrity crash tests in addition to those related to FMVSS No. 301 compliance certification. These consisted of side-impact tests conducted at speeds greater than 20 mph with either a flat-faced barrier or a vehicle as the striking device. GM conducted 32 of these side-impact tests between January 4, 1972, and July 3, 1991.* Five tests were flat-faced barrier impacts into the subject vehicle at 30 mph. These tests resulted in two fuel tank leaks. One test was a car impact into a truck at 35 mph, which resulted in a fuel tank leak. Four tests were done in support of litigation at speeds

---

* This figure does not include an unspecified number of tests conducted by or for GM in connection with litigation that have not been produced to NHTSA because GM asserts that they are protected from disclosure under the "work-product" doctrine.

ranging from 49 to 67 mph; two produced fuel tank leaks and in two, the test reports provided insufficient information to determine if a fuel leak occurred.

Beginning on July 24, 1981, GM conducted "fuel system integrity car-to-truck development corporate product performance objective (CPPO) tests" of the subject vehicles to "enhance the ability of the fuel storage system to manage significantly greater levels of energy" (GM's October 9, 1992 response (DP #12) at page 15). Twenty-two vehicle-to-vehicle side-impact tests were conducted at speeds up to 50 mph. Three of these tests were conducted at 30 mph, and the final nineteen at 50 mph. A detailed review of GM's CPPO testing is presented in the public file.

These tests continued through early 1984. On the basis of this test program, GM modified the fuel system for the model year 1984 to "enhance" the vehicles' crash performance. Among other changes, the new design included a plastic shield, new lower mounting brackets with increased load-capacity, a "breakaway" filler neck, and revised welding of the tank seams.

Fluid loss was noted in all 22 CPPO tests, although not all leaks were from compromised fuel tanks. A fuel tank leak was observed in one 30-mph impact test and thirteen 50-mph tests. Fuel tank seam failures were noted in nine of those tests, tears and punctures were observed in 4 tests, and a sending unit failure accounted for one fuel tank leak. Leaks from both the fuel tank and other sources (e.g., filler pipes, vent tubes, and gas caps) were observed in five of the 50-mph tests. Eight tests resulted in fluid leaks from other sources alone. Of those, one was observed after a 30-mph impact and the other seven resulted from 50-mph impacts.

L.2. ODI Testing

ODI developed a test program to examine the crash severities at which fuel leakage occurs in the subject vehicles and in peer vehicles and the risk of occupant impact injury, based on dummy injury measurements, at such severities. Eighteen vehicle tests were conducted at VRTC in addition to the FMVSS No. 301-type tests. The test vehicles included the subject GM full-sized pickup trucks and peer vehicles. Vehicles were tested either with new fuel tank systems or in the "as received" condition. Most of the tests of the GM trucks were performed on 1986-1987 models. Some static and dynamic component tests were also performed on the subject vehicles' fuel tanks and related parts to support the crash testing. Aside from the FMVSS No. 301-type tests described in section K.3, VRTC also conducted FMVSS No. 214-type side-impact tests, vehicle-to-vehicle side-impact tests, and pole barrier side-impact tests.

VRTC also conducted testing of three fuel tanks using the procedure specified for commercial vehicles over 10,000 lbs. in a standard issued by the Federal Highway Administration (49 CFR Ch. III, Subpart E - Fuel Systems). The purpose was to compare the performance of side-mounted tanks used on the subject vehicles with side-mounted commercial vehicle-type tanks used on certain Ford F-350 pickup trucks. The tests were conducted by filling the tanks with water to a weight equivalent to the maximum fuel load

and dropping the tank onto a hard surface from a height of 30 feet; i.e., an impact speed of approximately 30 mph. The standard allows a leakage rate not to exceed one ounce per minute by weight. Tests were performed on two GM tanks and one Ford tank. Both of the GM fuel tanks leaked most of their contents upon impact. The Ford tank leakage rate was measured to be about 11 ounces per minute by weight. All three of the tested tanks exceeded the maximum allowable leakage requirement in 49 CFR § 393.67(e)(1). The VRTC report, "Fuel Tank Drop Tests," is included in the public file for this investigation.

The principal results of the VRTC testing were as follows:

1. The single fuel tank leak (about 10 ounces/min) noted during the FMVSS No. 301-type side-impact tests was on a 1982 Chevrolet K-20, which sustained a cut in a rusty area of the tank. The other four GM vehicles tested did not leak at impact, although non-tank components of one GM and one Ford truck leaked during the post-crash rollover test.

2. No significant leaks were noted on three GM vehicles with new fuel tanks installed that were tested with the FMVSS No. 214 moving deformable barrier. In two tests (at 33 and 45 mph), the barrier was in the "crabbed" condition simulating both vehicles moving, as prescribed in FMVSS No. 214. In one test (at 45 mph), the 214 barrier was not "crabbed," but impacted the GM truck at 30 degrees from the perpendicular, with the vehicle's longitudinal axis in line with its velocity vector.

3. When impacted at the fuel tank location at a 30 degree angle from the perpendicular by a 1987 Ford Taurus at 45 mph, leaks in the GM tank were noted from the fuel gauge sending unit seal, the filler hose (which separated from the filler neck), and a small cut and a hole in a rusty area of the tank. These leak sites were verified after the tank was removed from the vehicle following the test. After subsequently refilling the tank to the sending unit O-ring, about 29 ounces leaked from the small cut before stopping after 10 minutes. An identical test with a 1987 Taurus striking a Ford pickup truck at the same impact point produced leakage of 55 ounces in one minute from the fuel reservoir mounted on the inside of the left frame rail.

4. When impacted at the fuel tank location at a 30 degree angle from the perpendicular by a 1986 GM pickup truck at 45 mph, no leakage was noted in either the GM or Ford trucks.

5. When impacted at the fuel tank location at a 30 degree angle from the perpendicular by a 1991 Chevrolet Caprice at 60 mph, leakage from the fuel tanks was noted on both the GM (tank split at one end and sprayed fluid) and Ford (small hole punched in tank) trucks.

6. When impacted at the fuel tank location at a 30 degree angle from the perpendicular by a 1991 Chevrolet Caprice at 50 mph, significant leaks/spray were noted from the tank (in "as received" and new conditions) on three GM trucks, but no leaks were

noted during a similar test on a Ford truck. Dummy injury measurements indicated that these crashes were survivable.

7. When impacted at the fuel tank location in a vehicle-to-pole test at 20 mph, leaks from the GM tank were noted from the deformed sending unit of the tank, while no leaks were noted during a similar test on a Ford. Dummy injury measurements indicated that these crashes were survivable.

8. The results of the crash test program are consistent with real-world crash data described in section N.1. That is, real-world crash data indicate a difference between GM and Ford pickups in the likelihood of fire occurrence in fatal side crashes. These tests indicate a difference in fuel tank integrity between these two vehicles in high-speed side crashes, in which dummy injury measurements indicated that these crashes were survivable.

L.3. GM Comparative Crash Testing of Ford and GM Trucks

In an effort to rebut ODI's testing, which demonstrated that the subject vehicles are more likely to leak fuel in certain side impacts than similar Ford pickups, GM contracted with Failure Analysis Associates (FaAA) to conduct a series of rear-impact tests of full-sized Ford and GM pickup trucks to compare their fuel system integrity performance in rear crashes. Since some 1973-1987 Ford F-series trucks had optional fuel tanks mounted behind the rear axle, the FaAA testing was designed to demonstrate that vehicles with fuel tanks mounted in the rear will experience leaks in rear-impact crashes at crash severities that would not produce a leak in the subject vehicles with fuel tanks mounted on the side.

FaAA conducted two rigid pole rear-impact tests at 20 and 30 mph, and one 50-mph vehicle-to-vehicle rear-impact test on Ford pickups and a 30-mph pole rear-impact test and a 50-mph vehicle-to-vehicle rear-impact test on GM pickups. In all three tests of the Ford trucks, there was a loss of fuel system integrity. In neither of the tests of the GM trucks was there a loss of fuel system integrity.

NHTSA agrees with GM that various laboratory test conditions can be chosen that show differences in fuel system performance between two different vehicles in a particular crash mode. However, as described below, NHTSA's finding of an increased risk of post-crash fires in the subject vehicles is based primarily on extensive analyses of real-world crashes. In real-world, side-impact fatal crashes, there is a difference between GM and Ford pickup truck fire performance. The ODI laboratory crash test results are consistent with, and support, this finding. However, FARS data indicates that in fatal, rear-impact crashes where fire caused the fatality, the GM and Ford trucks have almost identical fire performance; i.e., 0.09 fatalities per million registered vehicle-years for the Ford pickups and 0.08 fatalities per million registered vehicle-years for the subject vehicles. The objective of ODI's crash testing was to understand the vehicle design factors which may explain real-world differences. Since available data do not suggest any real-world differences between the GM and Ford trucks in rear crashes, the GM rear-impact tests do not undercut the agency's initial determination.

M. ADDITIONAL INFORMATION

M.1. Corrosion

As part of this investigation, ODI examined whether there was any increased risk of fire associated with corroded fuel tanks in the subject vehicles. The results of the corrosion analysis are described in the ODI report, "Corrosion and Fuel Tank Integrity," which appears in the public file for this investigation.

ODI reviewed all previous fuel tank corrosion investigations/recalls, analyzed consumer complaints received by ODI and by GM, examined FARS data to analyze the possible effects of vehicle age on fire-involved crash rates, reviewed state accident data files, analyzed State Farm Mutual Insurance Company vehicle fire claim data, analyzed vehicle fire data reported in the National Fire Incident Reporting System (NFIRS), and reviewed both original equipment manufacturer (OEM) and aftermarket fuel tank part sales.

The complaint data reflect a relatively low complaint rate regarding fuel tank leakage associated with corrosion in the subject vehicles and present no information to suggest the likelihood of fire resulting from such corrosion. Neither the FARS data nor the Michigan state accident data suggest that fuel tank corrosion in the subject vehicles contributes to fires in crashes. Similarly, the Florida state accident data do not suggest a fire problem in these vehicles due to corrosion in a non-crash environment. Insurance claims data revealed no significant difference in the fire claim rate between GM and Ford pickup trucks. The NFIRS information did not suggest that corrosion led to increased fire risk in the subject vehicles. The OEM and aftermarket parts sales information did not suggest a safety concern related to corrosion. After examining all available data from these sources, ODI has not identified any relationship between fuel tank corrosion and increased fire risk in the subject vehicles, in either side impacts or non-crash incidents.

M.2. Structural Integrity of the Subject Vehicles in a Side Impact

In its July 19, 1993, response to ODI's June 17, 1993, information request, GM asserted that "1973-1987 C/K pickup trucks 'manage collision energies very well in side impacts' both in terms of occupant protection and fuel system integrity." GM contended that the frame rail is designed to deform in side-impact crashes in a predetermined manner to effectively manage side impact collision energies and to protect the fuel tank from rupture.

ODI agrees that the structure of the subject vehicles will deform to some extent in certain side-impact crashes, and that such deformation can help to provide protection against tank rupture in some crashes. However, as the frame and structure of the truck deform and absorb energy, the force levels transmitted through the fuel tank will increase. Thus, while the truck structure can help to provide protection against tank failure up to some level of crash severity, in severe side-impact crashes, the force being applied to the tank, and the energy absorbed by the tank, will exceed the strength of the tank material, resulting in tank failure and the loss of fuel. This is demonstrated by GM's CPPO tests, ODI's crash tests, and real-world crashes.

M.3. Ignitability of Expelled Fuel

ODI contracted with the Building and Fire Research Laboratory (BFRL) of the National Institute of Standards and Technology (NIST) (formerly known as the Center for Fire Research, National Bureau of Standards) to analyze the ignitability of fuel expelled from the subject vehicles under two different leakage scenarios. The results of this analysis are presented in the public file.

M.4. Analysis of Specific Failure Modes

This investigation has primarily focussed on the issue of whether there have been a disproportionate number of fires arising from side-impact crashes in the subject vehicles, and on an assessment of the severity of crashes that led to such fires, rather than the particular failure modes that led to such fires.

On March 24, 1994, Arndt and Associates submitted a report titled "Failure Modes of General Motors C/K Light Truck Outboard Frame, Side Mounted Fuel Containment System" (EA 054978).[5] The Arndt report discusses numerous distinct failure modes that have led to fuel system leaks in crash tests and to fires in real-world crashes involving the subject vehicles. The report divides these failure modes into those associated with (1) tank position/mounting; (2) puncture by sharp objects surrounding the tank; (3) filler neck/cap failures; and (4) post-1983 fuel tank shield deficiencies.

Within each of these broad areas, the report notes a variety of specific failure modes.[6] It also includes appendices, which contain photographs of parts and systems, applicable GM design documents, and references to GM and NHTSA crash tests and real-world crashes that exemplify each of the identified failure modes. In general, the report provides evidence that, even apart from the basic decision to locate the fuel tanks of the subject vehicles outside of the frame rails, many of the specific features of the GM design have increased the likelihood of post-crash fuel fires.

---

[5] One of the major activities of Arndt and Associates is providing consulting services to plaintiffs in products liability litigation. The report in question was commissioned by the attorneys representing the plaintiffs in a class action filed against GM in connection with claims about the fuel system integrity of the subject vehicles.

[6] For example, section III of the report identifies the following "sharp objects surrounding the fuel tank:" fuel tank mounting bolt; fuel tank support strap; three different bolts/screws protruding through the cab floor; the forward leaf spring mount; fuel line mounting bolts on the right frame rail, post-1983 outboard fuel tank support; post-1983 shield mounting brackets; and the inner edge of the aft truck cab/the forward edge of truck bed.

N. SAFETY RISK ANALYSIS

ODI conducted extensive analyses of real-world accidents and crash data to assess the safety risk associated with the alleged defect. The data on which these analyses were based included data collected under the agency's FARS, Police Accident Reports (PARs)[7], autopsy reports, state accident data, insurance company data, reports of burn injuries, and crash test reports.

N.1. FARS Data

ODI's initial analysis of FARS data in this investigation is set forth in a report prepared by Susan Partyka. Fatalities, Fire-Related Fatalities, and Fatal Burns in Crashes Involving Certain Full-Sized American Pickup Trucks, NHTSA, April 26, 1993 (EA 003201). This analysis was recently updated by Ms. Partyka to include data through 1993. Fatalities, Fire-Related Fatalities, and Fatal Burns in Crashes Involving Certain Full-Sized American Pickup Trucks that Occurred from 1975 to 1993, NHTSA, June 30, 1994 (EA 058122). Both reports present comparative data on the frequency of fatalities, fire-related fatalities (i.e., fatalities in vehicles in which a fire occurred in a crash), and fatal burns (fatalities in crashes for which FARS indicates that the "most harmful event" (MHE) was fire) — both for pickup truck occupants in fatal crashes and for occupants of vehicles involved with pickup trucks in vehicle-to-vehicle fatal crashes. Considering fatal crashes in which there was a fire, the analysis uses the parameters of occupant fatalities, driver fatalities, and fatal crashes per million registered vehicle-years to assess safety performance. In addition to comparing these rates among domestic full-sized pickup trucks for all crashes, the analysis considers the rates for each individual crash mode (i.e., frontal, side, rear, and roll-over).

The focus of ODI's investigation was on side crashes in which the side-mounted fuel tank in the subject vehicles is subjected to crash forces which could result in a fuel leak and resultant fire. Although the location and mounting of the tanks also makes them vulnerable to impacts from other directions (such as sideswipes), the agency believes that this focus was appropriate, given the allegations that the tank is particularly vulnerable to side impacts.

The updated 1994 Partyka report indicates that, in calendar years 1979-1993, for all crash modes, the occupant fatality rates were 168.71 fatalities per million registered vehicle-years for the subject vehicles, 139.03 for Ford full-sized pickups, and 130.01 for Dodge full-sized pickups. As shown in Figure 3, the subject vehicles had a fatality rate per million registered vehicle-years of 30.62 in side crashes, compared to the Ford rate of 26.32, and the Dodge rate of 26.05. Further, in fatal side-impact crashes involving fire, the rate of fire-related

---

[7] Police Accident Reports are official reports filed by city, county, and state police officers to establish records of motor vehicle accidents. Reports generally contain information describing the vehicles involved, occupants, witnesses, vehicle speed, impact angle, road conditions, etc. The retention period varies among states, but is generally no longer than four years.

fatalities per million registered vehicle-years was 2.84 for GM, 1.03 for Ford, and 1.13 for Dodge. The ratio of the side-impact fire-related fatality rate for the GM pickup trucks to that of the Ford pickup trucks is 2.8 to 1. Finally, in those side-impact crashes in which fire was the MHE, comparative fatality rates were 1.40 for GM trucks, 0.41 for Ford trucks, and 0.23 for Dodge trucks. The difference in the side-impact MHE=fire occupant fatality rates between the GM and Ford trucks is 0.99 (1.40 - 0.41) occupant fatalities per million

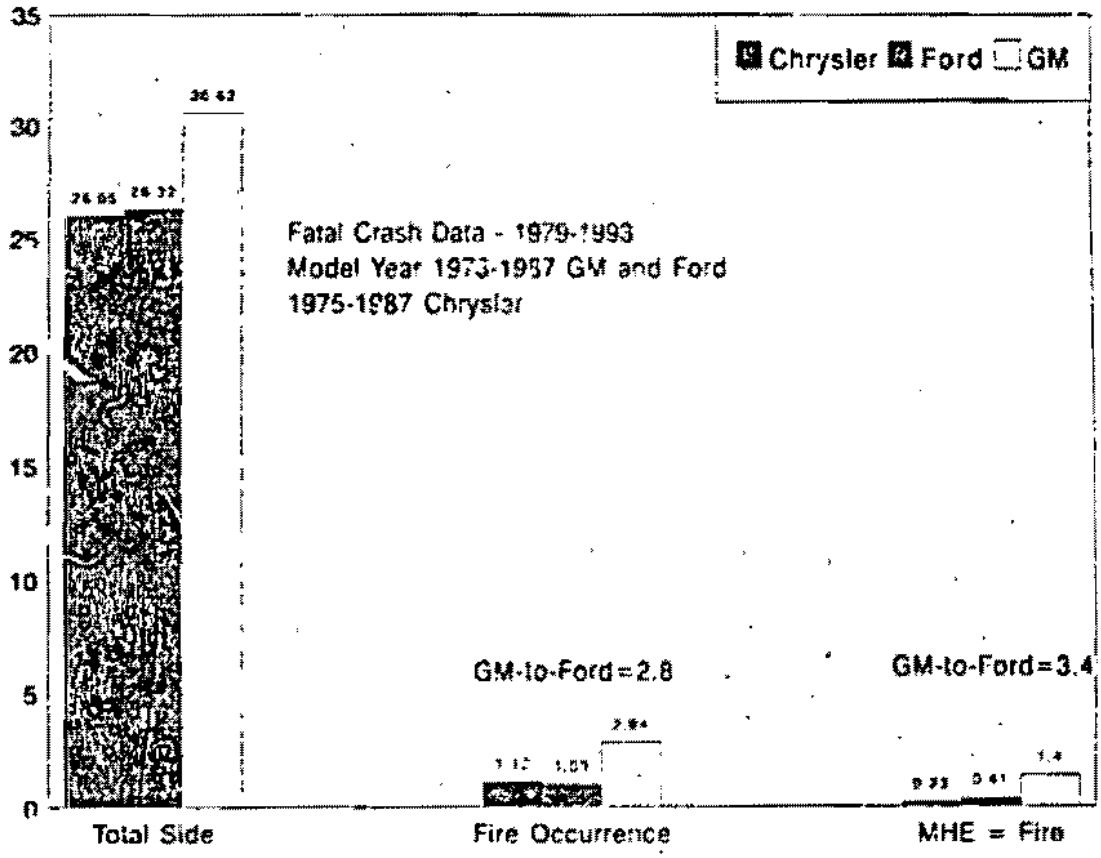

Figure 3. Side-Impact Occupant Fatalities per Million Registered Vehicle-Years

registered vehicle-years. The ratio of GM to Ford rates for side-impact MHE=fire occupant fatalities is 3.4 to 1.[5]

In addition to fatalities to occupants of pickup trucks involved in side impacts, the updated Partyka report also analyzed fatalities to occupants of the impacting vehicles. This analysis (Appendix A6, page 26) indicates that impacts into the side of the GM pickups resulted in an additional 0.07 occupant fatalities due to fire per million registered vehicle-years in the striking vehicle compared to what occurred in impacts into the side of Ford pickups.

Summing these two incremental increases reveals that there have been approximately 1.06 additional occupant fatalities per million registered vehicle-years involving side-impact MHE=fire crashes into the subject vehicles compared to fatalities in such crashes into Ford full-sized pickups. Given the number of subject vehicles on the road (4.8 million) as of July 1, 1994,[6] NHTSA estimates that, if past trends continue, the increased risk of fire in side crashes involving the subject vehicles will result in approximately five additional fatalities in side-impact crashes in 1994.

The annual number of incremental fatalities will decrease over time as the subject vehicle population decreases. Table 4 presents these estimates through the year 2012, using the incremental rate of 1.06 occupant fatalities per million registered vehicle-years derived in the updated Partyka report.

---

[5] The GM-to-Ford comparisons set out in the updated report, using data through 1993, are essentially similar to those set out in Ms. Partyka's initial analysis, which was based on data through 1990. For example, see Table 3 below.

Table 3. Comparison of Side-Impact, Occupant Fatality Rates Where MHE=Fire in 1993 and 1994 Partyka Reports

Side-Impact, MHE=Fire Occupant Fatality Rate	1993 Report 1979-1990 Accident Years	1994 Report 1979-1993 Accident years
GM	1.47	1.40
Ford	0.42	0.41
GM-to-Ford difference	1.05	0.99
GM-to-Ford ratio	3.5 to 1	3.4 to 1

[6] Because July 1 is the midpoint of the calendar year, the number of vehicles on the road on July 1 can be considered as the average number of vehicles on the road throughout the year.

Table 4. 1973 through 1991 GM C/K; R/V Estimated Remaining Registered Vehicles and Additional Burn Fatalities			
Year	Estimated Population	Annual Additional Burn Fatalities[1]	Cumulative Additional Burn Fatalities[2]
1994	4,927,465	5.12	5
1995	4,311,760	4.57	10
1996	3,794,057	4.02	14
1997	3,288,473	3.49	17
1998	2,815,392	2.98	20
1999	2,385,375	2.53	23
2000	2,001,516	2.12	25
2001	1,652,845	1.75	27
2002	1,334,322	1.41	28
2003	1,050,567	1.11	29
2004	801,406	0.85	30
2005	594,303	0.63	31
2006	437,034	0.46	31
2007	330,779	0.35	31
2008	266,230	0.28	32
2009	226,333	0.24	32
2010	198,925	0.21	32
2011	177,585	0.19	32
2012	159,319	0.17	32

[1] Actual numerical estimate
[2] Rounded to nearest integer based on cumulative total of actual numerical estimates

The previous analysis compared the side-impact fire performance of the GM and Ford pickups in terms of occupant fatalities. To eliminate the effects of multiple occupancy, so that only vehicle fire performance is measured, the updated Partyka report also includes an analysis based the number of vehicles involved in crashes in which at least one occupant fatality occurred in the vehicle being analyzed. The methodology is identical to that previously discussed. The increase in the number of subject vehicles involved in fatal side MHE=fire crashes compared to the Ford truck is 0.68 vehicles per million registered vehicle-years (Appendix A1, page 8). For vehicles impacting the side of the subject vehicles

compared to the Ford trucks, the increase in the number of vehicles in fatal crashes in which MHE=fire was 0.02 (Appendix A4, page 20), for a total of 0.70 incremental side-impact fatal crashes where the MHE=fire per million registered vehicle-years. Thus, given the 4.8 million subject vehicles on the road as of July 1, 1994, ODI estimates that, if past trends continue, the increased risk of fire in those vehicles will result in approximately three to four additional fatal, side-impact MHE=fire crashes in 1994.

N.2. Validity of FARS Coding

In its July 19 and August 10, 1993, responses to ODI information requests, GM identified a number of examples of FARS cases involving side-impact collisions with fire that GM believes were incorrectly coded or are not relevant to the alleged defect. GM provided this information to support its contention that FARS data do not provide a reliable basis for analyzing the crashworthiness of the fuel system in the subject vehicles: GM provided narrative descriptions of alleged errors in five categories:

1. Not a 1973-1987 C/K pickup truck;
2. No fire in the C/K pickup, or fire originating in other vehicle;
3. Engine compartment fire;
4. Fuel system not as designed; and
5. No side impact.

Of the 168 fatal, side-impact, fire-involved crashes involving 1973-1987 GM subject vehicles from 1975 to 1991, for which matching registration data exist, GM identified 17 FARS cases (10 percent of the total) that it believes fit into at least one of the above five categories. GM provided information based on police reports, photographs, witness statements, rescue squad documents, etc., to support its claim in the five respective categories that:

1. 1 crash involved a GM pickup truck built in the 1964-1966 time frame;
2. 5 crashes either involved no fires (3 crashes) or involved fires that started in another vehicle (2 crashes);
3. 6 crashes involved engine compartment fires in the GM truck;
4. 3 crashes involved fires in vehicles that had aftermarket fuel tanks added; and
5. 2 crashes were not side impacts.

ODI has reviewed the GM analysis and agrees that certain crashes appear to have been miscoded. However, none of the 17 FARS cases identified by GM were coded as MHE=fire. Since the agency's data analysis focused on crashes where the MHE=fire, the FARS errors identified by GM did not have any significant effect on the outcome of that analysis. Additionally, in the absence of any indication that fatal crashes involving the subject vehicles were coded differently from such crashes involving Ford pickups, it is logical to assume that coding errors affected different vehicles similarly, thus reducing any effects on comparisons of relative performance among vehicles. Thus, the fact that there are coding errors in the FARS database does not mean that FARS is an inappropriate database for estimating incremental fatalities associated with or caused by fire in the subject vehicles.

The coding of MHE in FARS is determined by a FARS analyst based on a review of the PARS and available medical reports, but in most instances without the benefit of an autopsy report, since autopsies are not routinely conducted on fatally injured motor vehicle crash victims. GM challenged the accuracy of the FARS MHE coding in its April 30, 1993, response to ODI's April 9, 1993 recall request letter. In that response, GM detailed the results of its review of the Multiple Cause of Death (MCOD) data collected by the National Center for Health Statistics with respect to side-impact fatal accidents in FARS involving 1973-1987 full-sized GM pickup trucks in which there was a post-crash fire. The MCOD file contains data concerning deaths occurring in the United States since 1973, with the exception of calendar years 1981 and 1982. Information available in the MCOD database includes the underlying cause of death, with a maximum of 19 additional contributory causes. The MCOD coding is based on information available on the Certificate of Death, and the coding is done by the individual states. Unless data are missing or conflicting on the Certificate of Death, no attempt is made during MCOD coding to obtain additional information. The cause and underlying causes of death reported on the Certificate of Death can be entered by a variety of persons, including doctors, coroners, medical technicians, and funeral directors. Some Certificates of Death are prepared after an autopsy is performed and others are not.

GM submitted an analysis of 48 fatal, fire-related crashes involving 1973-1987 full-sized GM pickup trucks in calendar years 1979 through 1988 where the FARS MHE code was fire. GM noted that in 23 of the cases the MCOD coding was "fire injury" (including various additional contributing causes, e.g., shock, fractures and contusions, asphyxia, etc.), in 16 of the cases the MCOD coding was trauma, and in 9 of the cases the MCOD coding was "both fire and trauma injury." Using only the 39 MCOD cases where a single cause of death was listed, GM's analysis shows that in 23 cases (59 percent), the fatal injuries were attributed to fire.

In response to a request from ODI, on August 10, 1993, GM provided an analysis of 44 MCOD matches with fatal, fire-involved crashes of 1973-1987 full-sized GM pickup trucks where the crashes occurred in calendar years 1979 through 1988, and the FARS MHE code was "other than fire" (i.e., trauma). GM stated that in 12 of these cases, the MCOD coding indicated that the cause of death was fire. In 20 of these cases, the MCOD coding indicated that the cause of death was other than fire. In another 12 cases, GM stated that the cause of death was "both fire and non-fire injuries." Using only the MCOD cases where a single cause of death was listed, GM's analysis indicates that in 12 of 32 cases (38 percent), the fatal injuries were attributed to fire. Thus, there are differences between MHE coding and MCOD coding for both the "fire" and "trauma" categories that tend to counterbalance each other, suggesting that the MHE coding is a reliable indicator of the cause of death in fire-related crashes.

A comparison of the GM findings using MCOD data with ODI's analysis of FARS and autopsy data appears in section N.4 of this Report.

N.3. GM/FaAA Analyses of FARS Data

GM contracted with FaAA to assess the risk of post-collision fires in the subject vehicles compared to the risk of similar events in comparable vehicles. Vehicle groups studied were Chrysler, Ford, Nissan and Toyota pickups, as well as the "average" passenger car and the "95th percentile" passenger car.

FaAA examined FARS data and also analyzed several state accident databases. FaAA used data from the six states that utilize the coding variables required to identify vehicle types, collision fires, and area of impact. FaAA analyzed the aggregate data for the 1973-1991 time period, and also disaggregated the data into seven model year groupings, based on what it believed were significant changes in the fuel system of the subject vehicles. FaAA concluded that the side-collision fire rates for the subject vehicles are "generally similar" to the comparison vehicles in collisions of all severity reported in the state data files. FaAA acknowledged that in fatal, fire-involved, side collisions, the fire occurrence rate of the subject vehicles is "generally higher" than other pickups, but asserted that the subject vehicles are not "greatly disparate" from the comparison vehicles.

The initial version of this FaAA analysis, entitled "Analysis of Light Duty Motor Vehicle Collision Fire Rates," was submitted with GM's October 9, 1992 response to ODI's first information request (DP Exhibit 3). This initial FaAA analysis compared GM full-sized pickup trucks with Ford and Dodge pickup trucks of all sizes. GM provided an additional FaAA submission on November 25, 1992, in which only comparably sized pickup trucks were analyzed (DP #33 and #33a).

GM's analysis of FARS data is generally consistent with ODI's. GM's November 25, 1992, analysis indicates that the subject vehicles have a rate of fire occurrence that is 2.7 times greater than that of comparable Ford pickup trucks in fatal side-impact crashes and a rate that is four times greater than that of comparable Ford pickup trucks in fatal side crashes where the MHE=fire.

In response to ODI's recall request letter, GM provided additional analyses of FARS data. Although GM did not dispute the 3.5 to 1 MHE=fire fatality rate ratio as computed from the 1979-1990 FARS data, it claimed that this ratio does not indicate that the subject vehicles present an unreasonable risk of post-crash fires. In support of this claim, GM presented a series of vehicle fire rate comparisons in an effort to show that many other pairs of vehicles experience differences in the rate of fire-related fatalities that are greater than the difference between GM and Ford pickups.

In its analysis, for each make and model considered, GM divided the number of vehicles involved in a fatal crash in which a fire occurred by the number of registered vehicle-years of that make and model. In ODI's view, this approach has several shortcomings. First, the fire rates calculated by GM include all fatal crashes in which fire occurred, even though in many cases the fire was not the cause of death and might not have posed a significant threat to occupant safety. ODI's analysis focused on MHE=fire crashes, which are a subset of fire occurrence crashes and represent crashes in which fire is the most harmful occurrence (as

opposed to mechanical trauma forces). ODI believes that in this investigation, where the pertinent issue is whether there is an unreasonable risk of fire that results in occupant death or injury, fire occurrence crashes are not as relevant as MHE=fire crashes.

Second, in making its vehicle-to-vehicle comparisons, GM used registered vehicle-years as the measure of exposure. In instances in which the vehicles being compared are driven in a similar manner by similar types of drivers, as is the case with the subject vehicles and Ford full-sized pickups (see section N.6, below), this measure of exposure is satisfactory. However, in many, if not most, vehicle-to-vehicle comparisons, this exposure measure allows the effects of driver behavior and demographics on crash involvement to bias the results. For example, if a particular make or model of vehicle is driven by drivers with a high crash involvement frequency compared to another make or model with a similar design, that vehicle would almost certainly have a higher number of crashes with fire, even if there were no vehicle-related differences. Such effects can be very large, particularly when different types of vehicles are compared, making it difficult or impossible to accurately assess the contribution of a vehicle's design to its post-crash fire performance.

There are two other factors that undercut the force of this GM statistical analysis. Although the data indicate that some vehicle pairs have greater differences in rates of fire-related fatalities than the difference between the GM and Ford full-sized pickups, there are no identifiable engineering or design bases for the differences, as there is here. In addition, in none of the examples identified by GM was there a history of corporate awareness of a safety problem like there is here, as described in section P of this report.

Based on these considerations, the GM approach does not provide an adequate assessment of the contribution of vehicle factors to post-crash fires that result in occupant casualties.

N.4. Autopsy Data

Since the FARS MHE code was an important component in ODI's statistical analysis of the fire risk associated with the alleged defect, and GM challenged the validity of that code, ODI reviewed autopsy reports to examine whether the FARS MHE code was an accurate representation of the actual cause of death in fatal side-impact crashes involving fire in the subject vehicles.

ODI reviewed all available autopsy reports, 74 in all, involving occupants of the subject vehicles who died in side impact crashes that resulted in a fire. Since such reports are generally maintained in the individual states' FARS files, and these files are only maintained for several years, there is a limited number of available reports available through FARS. Other such reports were received from GM in response to ODI information requests.

ODI believes that an autopsy is the best means of accurately determining the actual cause of death. Unless based on an autopsy, Certificates of Death, Medical Examiner Reports, Coroner Reports, etc., are a far less reliable indication of the actual cause of death. While autopsies generally give primary and secondary causes of death, only the primary (or first listed) cause was used in this analysis. In some instances where a copy of the autopsy was

not available, but the Certificate of Death noted that an autopsy had been performed; the primary cause of death from the Certificate of Death was used.

Of the 74 cases reviewed, 49 involved crashes where the FARS MHE code was fire, and 25 involved accidents where the FARS MHE code was other than fire; i.e., crash force trauma. The primary cause of death based on the autopsy matched the FARS MHE code in 48 cases (65 percent). Of these 48 cases, 36 were cases where the FARS MHE code was fire and the autopsy indicated that fire was the cause of death. In the other 12 cases, the FARS MHE code was trauma and the autopsy indicated that trauma was the cause of death. Of the remaining 26 cases, i.e., those where the FARS coding did not match the autopsy results, there were 13 instances where the FARS MHE coding indicated other than fire, but the autopsy reported that fire was the actual cause of death, and 13 occurrences where FARS coding indicated fire, but the cause of death was trauma. Table 5 presents the distribution of the 74 cases.

Table 5. FARS MHE Code Compared with Autopsy Cause of Death In Side-Impact, Fire-Related Crashes in Subject Vehicles

		FARS Coding		TOTAL
		Fire	Trauma	
Autopsy Cause of Death	Fire	36	13	49
	Trauma	13	12	25
	TOTAL	49	25	74

These data indicate that in crashes in which a fire occurred and the FARS coding is MHE=fire (49 cases), the cause of death was fire according to an autopsy for 73 percent (36/49) of the cases. (The GM analysis using MCOD data yielded a figure of 59 percent). Similarly, for those cases in which the FARS coding was MHE=trauma (25 cases), the autopsy indicated that fire was the cause of death in 52 percent (13/25) of the cases. (The GM analysis using MCOD data yielded a figure of 38 percent.) Although the correspondence of FARS MHE codes to autopsy results is not perfect, the differences go in both directions. On balance, the available information indicates that, for fatal crashes involving fire, the MHE code in FARS provides a reliable measure of the number of such fire-related fatalities in which fire was the cause of death.

The complete analysis of the above data, including an analysis supporting the use of MHE=fire as an accurate measure of fatalities caused by fire and a listing of reviewed autopsy reports, appears in the public file for this investigation

N.5. The Usefulness of State Accident Data

GM has argued that state data files (databases containing records of a state's police-reported crashes) are superior to FARS as a data source for assessing fire performance. In state data, the measure of exposure is the number of reported collisions. The measure of interest is the number of specific types of events, e.g., crashes with fires, per 1,000 collisions. GM states that by comparing performance on a per collision basis rather than using other exposure measures, such as the number of registered vehicles, differences due to driver exposure effects are eliminated.

NHTSA recognizes that state data files are valuable in assessing numerous safety issues, and the agency will continue to use them where appropriate. However, the usefulness of state files or other crash data sources depends on the safety issue to be addressed. ODI believes that state accident data do not provide sufficient insight into the relationship between the fuel tank design in the subject vehicles and fire occurrence in crashes. Since the vast majority of police-reported crashes occur at the lower end of the crash severity spectrum, fire occurrence differences due to the loss of fuel tank integrity in relatively high crash severity events — which is where differences between GM and Ford fuel tank performance would appear — would not be evident in state accident data. That is, in state data, the relatively low number of higher crash severity events is overwhelmed by the high frequency of lower crash severity events, some of which can result in fires due to factors other than the loss of fuel tank integrity. Thus, any differences in fire occurrence at higher severities due to the loss of fuel tank integrity would be masked when comparing fire occurrence rates over the entire crash severity spectrum covered by the state databases.

Data from the National Accident Sampling System (NASS) demonstrate this phenomenon. NASS is a sampling of police-reported towaway crashes (those crashes in which the damage to the vehicle was severe enough to require towing) of all crash severities involving "light vehicles" (defined as passenger cars, light trucks and vans with a GVWR of 8,500 lbs or less). Table 6 shows, as percentages, for all passenger cars, light trucks, and vans, the portion of side crashes that occur in each crash severity range; the portion of those side crashes in each severity range that involve fire; and the product of those two in each speed range, which is the ratio of the side crashes with fire within each severity range to the total number of side crashes. Crash severity is defined as the estimated speed change in the crash, i.e., delta-V, derived from NASS data. Thus, in a state that reported data on all towaway side impact crashes, an overall fire rate of 0.35 percent would be expected.

If these vehicles had a significantly higher fire occurrence rate due to fuel tank integrity loss in crashes in the high range of delta-V, the overall fire rate would not noticeably change. For example, if the fire occurrence rate in 40-49 mph delta-V side crashes increased by a factor of 2.8, from 3.76 percent to 10.53 percent, the percentage of all side crashes with fire in the 40-49 mph delta-V category would increase from 0.0075 percent to 0.0211 percent, but the overall fire rate in side impacts would only increase from 0.35 percent to 0.36 percent. Thus, a 2.8 times greater fire risk at this higher crash severity would result in only a 0.01 percent increase in the overall fire rate in side impacts.

Table 6. Fire and Crash Severity for Light Vehicle Side Crashes Where the Crash Severity was Known (1979-1986 NASS Towaway Data)

Speed Change Delta-V, mph	(1) Side Crashes in Crash Severity Range / Total Side Crashes	(2) Side Crashes with Fire in Severity Range / Side Crashes in Speed Range	(1)x(2) Side Crashes with Fire in Severity Range / Total Side Crashes
0-9	40.99%	0.08%	0.0323%
10-19	50.14%	0.45%	0.2261%
20-29	7.55%	0.96%	0.0729%
30-39	1.07%	0.94%	0.0101%
40-49	0.20%	3.76%	0.0075%
50+	0.05%	0.00%	0
	100.0%		0.3489% = 0.35%

This example demonstrates why state data are not a valid measure for assessing the role of fires due to loss of fuel integrity in this defect investigation. Since fuel tank integrity is generally not compromised until high crash severities are reached, state data are not useful in comparing fuel tank-related fire performance differences among vehicles. If state data could be disaggregated, so that only crashes above the level of crash severity that is associated with the potential for loss of fuel tank integrity were considered, state data could be an appropriate database. However, such a crash severity disaggregation is not possible with state data.

It is also appropriate to consider whether the state accident data submitted by GM provide a representative data sample, given that the alleged defect is a national safety concern. That is, when using accident data from a limited number of states, it is necessary to determine whether those data represent national accident conditions.

GM's most comprehensive analysis of state data appears as Appendix O to GM's August 10, 1993, submission. This document presents accident statistics from nine states: Alabama, Arkansas, Florida, Idaho, Illinois, Maryland, Michigan, North Carolina, and New York. Included in this database was information on the number of side-impact and total crashes in the following categories: all reported crashes, incapacitating injury crashes, fatal crashes, post-collision fire-involved crashes, and post-collision fire-involved fatal crashes. GM reported a total of 13 side fire-involved fatal crashes out of a total of 241 side-impact fatal crashes in six of those states. (GM did not provide information regarding location of impact for three of the nine states.) This yields a fire occurrence rate of 5.4 percent (13/241) in fatal side-impact crashes. The updated Partyka analysis of national data from FARS

indicates that 8.6 percent of the side-impact fatal crashes involving the subject vehicles had a post-crash fire (Appendix A1, page 7). Thus, the national fire rate in side-impact fatal crashes is 59 percent greater than that rate in the six states analyzed by GM.[10] The fact that GM's state data yield fatal fire occurrence rates for the subject vehicles that are substantially lower that the national rates indicates that these limited state data do not provide a valid representation of the nationwide experience with respect to side-impact, fire-related fatal crashes involving the subject vehicles. Therefore, even apart from their doubtful utility in addressing issues related to post-crash fuel system integrity, they do not provide a valid basis for assessing the overall fire occurrence experience of the subject vehicles.

N.6. The Effect of Driver Demographics and Behavior

In its August 10, 1993 submittal, GM stated that "non-vehicular factors must account for all or most of the differential" in post-crash fire rates between GM and Ford full-sized pickups. Relying primarily upon state data, GM claims that this difference is ". . . chiefly a reflection of driver or exposure difference and not a vehicle design or performance difference."

To assess the validity of GM's assertion, ODI conducted several analyses. First, if the demographics and behavior of drivers of the subject vehicles were responsible for the increased number of fatalities due to fire in side-impact crashes of the subject vehicles compared to the Ford pickups, this increase would be expected in both the 1973-1987 and the 1988-1992 model year groups.[11] The number of side-impact MHE=fire occupant fatalities for calendar years 1979-1993 are presented in Table 7, along with the rates of side-impact MHE=fire occupant fatalities per million registered vehicle-years for various model year groupings.

---

[10] In all crash modes, GM's nine-state data show that there were 52 fires in 1,384 fatal crashes involving the subject vehicles, yielding a fire occurrence rate of 3.8 percent in all fatal crashes. National data from FARS yield a fire occurrence rate in all fatal crashes involving the subject vehicles of 6.5 percent (Appendix A1, page 6), which is 70 percent greater than the nine-state rate.

[11] ODI focussed its statistical analyses on a comparison of the post-crash fire performance of the subject vehicles to that of MY 1973-1987 Ford full-sized pickups, primarily on the basis that those Ford pickups were a product of the construction, design, and materials technologies in use during the period in which the subject vehicles were produced. However, in considering the possible effect of driver demographics and driver behavior on fatal fire rates, it is clearly appropriate to compare the fire performance of the subject vehicles to that of the post-1987 C/K pickups, as well as to the fire performance of pre- and post-1987 Ford pickups. It is also noteworthy that although GM incorporated numerous design changes into its MY 1988 pickups, the primary difference for fuel system integrity purposes was the shift of the fuel tanks inside the frame rails.

062459

Table 7. Comparison of Side-Impact MHE=Fire Occupant Fatality Rates for Various Model Years of Ford and GM Full-Sized Pickups (FARS Data 1979-1993)			
Make	Model Years	MHE=fire Occupant Fatalities	MHE=Fire Occupant Fatalities per Million Registered Vehicle Years
GM	1973-1987	120	1.40
Ford	1973-1987	31	0.41
GM	1988-1992	3	0.36
Ford	1988-1992	3	0.41

For the 1988-1992 model year group in comparison to 1973-1987, the location of the Ford fuel tank remained the same -- inside the frame rails -- while the GM fuel tank was moved inside the frame rails. For Ford, the occupant fatality rates for the two model year groupings are identical (0.41 for both the 1973-1987 group and the 1988-1992 group). However, the rate for the 1988-1992 GM pickups is significantly lower than that of the subject vehicles, declining from 1.41 to 0.36 occupant fatalities per million registered vehicle-years.

These data provide the most compelling evidence that the substantial difference in the rate of MHE=fire fatalities in side-impact crashes involving 1973-1987 GM and Ford full-sized pickups is due to fuel tank location and design rather than demographic and behavioral differences between drivers of these pickups or other exposure differences. If such factors were significant, the rate of occupant fatalities for the 1988-1993 GM pickups should be similar to that of the 1973-1987 GM pickups, and be far in excess of the rate for the 1988-1993 Ford pickups. Neither of these relationships is reflected in the data. Rather, these data show that there was a substantial decrease in the side-impact MHE=fire occupant fatality rate for the GM pickups when the fuel tanks were moved inside the frame rails. Thus, they provide further support for a determination that the increased fatalities due to burns from side-impact crashes involving the subject vehicles are due to the design and location of their fuel tanks.

In a further effort to assess GM's claims regarding alleged demographic differences, ODI also reviewed available state data to assess whether the subject vehicles were involved in a disproportionate number of crashes per registered vehicle compared to full-sized Ford pickups across the entire crash spectrum. As noted above, because fire-related fatal crashes are very rare and represent a small portion of total crashes, care must be taken in using state accident data to analyze fire-related fatal crashes. Because they cover the entire crash severity spectrum, however, state data may be used in assessing whether there are differences in the number of collisions per registration between the subject vehicles and Ford pickups.

Table 8. Crashes and Registered Vehicle Counts for Full-Sized Pickup Trucks for Three States in Selected Calendar Years

	Total RVY (Registered Vehicle-years)	All Crash Involved Vehicles	Crash Involved Vehicles per 10,000 RVY	Ratio of GM-to-Ford	Side Crash Involved Vehicles	Side Crash Involved Vehicles per 10,000 RVY	Ratio of GM-to-Ford
MARYLAND 1981-1991							
FORD 1973-1987	884,609	33,647	380		15,492	175	
GM 1973-1987	708,183	27,440	387	1.02	12,630	178	1.02
MICHIGAN 1982-1991							
FORD 1973-1987	2,128,547	125,158	588		63,304	297	
GM 1973-1987	2,374,567	140,797	593	1.01	69,568	293	0.99
PENNSYLVANIA 1988-1991							
FORD 1973-1987	948,878	20,311	214		9,834	104	
GM 1973-1987	829,229	18,827	227	1.06	8,747	105	1.01

00346

Although the data on collisions per registration are not extensive, some states have sufficient data for the relevant years to shed light on this issue. By obtaining the number of vehicles in crashes and the number of vehicle registrations over a period for both GM and Ford trucks, the rate of collisions per 10,000 registered vehicle-years can be calculated. Table 7 presents the number of crash-involved vehicles and registered vehicles for both "all" and "side" crashes in the three states for which adequate data are available in the calendar years noted.

The fourth column presents the ratio of all crashes per 10,000 registered vehicle-years for GM compared to Ford for the three states. As shown, the ratio ranges from 1 to 6 percent higher for GM compared to Ford. The seventh column presents the ratios of crashes per 10,000 registered vehicle-years for GM compared to Ford in side crashes. This ratio ranges from 1 percent lower to 2 percent higher for GM.

If there were significant differences in the behavior of drivers between these two vehicles, such that the GM drivers were more susceptible to crash involvement, these ratios would reflect such a difference. The consistency of the ratio among the states leads to the finding that driver characteristics do not produce a substantially different degree of crash involvement for the GM and Ford trucks.

ODI also examined insurance data to assess possible driver effects on crash involvement. The Highway Loss Data Institute (HLDI) retains information on the collision claims filed by drivers of various make/model vehicles. The parameters available include the number of collision insurance claims filed per insured-vehicle-year (a measure of exposure), as well as the average loss payment per claim. These data are helpful in assessing any effects of driver demographics and behavior on overall crash involvement. First, it is logical that if drivers of GM pickups exhibited behavior which increased their risk of crash involvement, the number of collision claims per insured-vehicle-year for the subject vehicles would be elevated compared to that of Ford pickups. Second, if the drivers of GM pickups were involved in, on average, more severe crashes than drivers of Ford pickups, the average cost per claim for the GM trucks would be higher. These HLDI data for model year 1979-1987 full-sized GM and Ford pickups are presented in the public file. The values for the data are normalized to passenger cars, with 100 representing the average passenger car value. The data do not indicate that drivers of GM pickup trucks are involved in more crashes, or more severe crashes, compared to drivers of Ford pickups.

Because of the deficiencies and limitations of the state databases relied upon by GM, ODI analyzed FARS data to assess whether demographic and behavioral characteristics, which GM claimed were the cause of the difference in side-impact fire fatality rate between GM and Ford trucks, were reflected in that data.[12] For example, Table 9 presents the number and percentage of fire involved side-impact driver fatalities, by age of driver, in the GM and Ford pickup trucks.

---

[12] Susan Partyka, Fire and other Factors in Crashes with Driver Fatality in Certain Full-Sized American Pickup Trucks, NHTSA, November 17, 1993. This report appears in the public file for this investigation and excerpts appear in Appendix F of this Report.

Table 9. Distribution of Driver Fatalities in Side-Impact Crashes by Driver Age							
Driver Age	GM			Ford			Ratio of GM-to-Ford
	Total Driver Fatalities	Fire-Involved Driver Fatalities	Percent Fire-Involved Driver Fatalities	Total Driver Fatalities	Fire-Involved Driver Fatalities	Percent Fire-Involved Driver Fatalities	
0-14	6	0	0.0	3	0	0.0	—
15-19	277	36	13.0	173	9	5.2	2.5
20-24	366	43	11.8	242	12	5.0	2.4
25-44	888	89	10.0	690	32	4.6	2.2
45+	794	56	7.1	730	24	3.3	2.2
All	2,331	224	9.6	1,838	77	4.2	2.3

These data indicate that, for both GM and Ford trucks, the percentage of drivers killed in side-impact crashes in which fire occurred generally decreases as the age of the driver increases. However, the ratio of GM-to-Ford driver fire-involved fatality rates in the different age groups is consistently between 2.2 and 2.5, with an average value of 2.3. The only way this consistent relationship could be related to non-vehicle factors is if, within each age group, drivers of the GM trucks drove their vehicles differently than drivers of the Ford trucks drove their vehicles. Thus, differences in age among drivers of GM and Ford trucks in fatal crashes cannot explain the differences between the GM and Ford fatal side-impact fire rates.

Additional analyses are included in the November 17, 1993, Partyka report for other factors that GM asserted were relevant, including alcohol use and posted speed limit. As with the driver age analysis, the data indicate that the percentage of fire-involved crashes in GM trucks was higher compared to Ford trucks in both alcohol-involved and non-alcohol-involved crashes, as well as at all speed limits.

These analyses indicate that the GM driver fatalities tended to be slightly younger than the Ford driver fatalities and more of them were reported to have been drinking, based on cases for which alcohol involvement was reported. This difference suggests that the GM pickup trucks might be driven less cautiously, but it is not possible to describe general vehicle use from fatal crash data alone. There was little difference in the types of roads on which these vehicles were used, 66 percent of both Ford and GM pickup truck driver fatalities occurred with a speed limit of at least 55 mph, and 78-79 percent of these crashes occurred in rural areas. Most important, the analyses demonstrate that the percentage of driver fatalities that involved fire is greater for GM pickup trucks (compared to Ford pickup trucks) in every

category of driver age, alcohol use, speed limit, and urbanization. Thus, while driver risk-taking might contribute to some degree to the higher rate of fire involvement in fatal crashes for GM pickup trucks, the data do not support GM's contention that driver demographics and behavioral differences account for the differences between GM and Ford full-sized pickup trucks in fatal crashes involving fire.

In a further effort to support its assertions about the effect of demographic differences, GM submitted a paper entitled "Exposure Severity, Crash Severity, and Crash Outcomes," dated March 1994 (EA 54827). The paper asserts that 1973-1987 GM full-sized pickup trucks have a larger portion of crashes in the crash severity range of 15 mph delta-V and higher, compared to 1973-1987 Ford pickup trucks. The paper suggests that this apparent crash severity exposure difference could explain the difference in the fire-related fatality rates between GM and Ford trucks, rather than differences in fuel tank location in the two pickup trucks.

To begin with, the NASS data sample on which this paper was based was not designed to be utilized in comparisons of particular vehicles, in part because of its relatively small size. In any event, the ODI analysis of non-vehicle factors described above demonstrates that the differences in post-crash side-impact fire rates cannot be explained by such non-vehicle factors. Thus, even if it were true that the subject vehicles were somewhat more likely than the Ford pickups to be involved in high severity crashes, such a difference could not explain the extent of the differences in the vehicles' fire-related fatality rates or MHE=fire fatality rates in side-impact crashes or in all crashes.

N.7. Burn Injury Data

In addition to its analysis of fatal accidents, ODI also examined the issue of burn injuries arising from post-crash side impact fires involving the subject vehicles.

As of December 31, 1993, ODI had reports reflecting a total of 158 non-fatal burn injuries (in crashes occurring from 1973-1993) to occupants in side-impact post-crash fires involving the subject vehicles. Of the 158 persons injured, 129 were occupants of the GM truck, and 29 were occupants of other vehicle(s) involved in the accident. Of the 129 occupant injuries, 104 occurred during the period 1979-1993.

To ascertain the relationship between burn injuries and burn fatalities in the subject vehicles, ODI divided the number of occupant burn injuries from side-impacts during 1979-1993 (104) by the number of MHE=fire side-impact occupant fatalities during the same time period (139), resulting in a ratio of 0.75. That is, the data indicates that there have been three burn injuries to occupants of the subject vehicles from side-impact crashes for every four MHE=fire side-impact occupant fatalities. Applying this ratio to the estimated five additional occupant fatalities in the subject vehicles expected in 1994 results in an estimated 3.4 additional burn injuries in the subject vehicles compared to the Ford pickups in 1994.

ODI also reviewed a recent analysis of eleven years of NASS data involving the light motor vehicle fleet to see if it confirmed this relationship.[13] Extrapolations from the NASS data indicate that there were an estimated 3,083 survivors of crashes with AIS[14] 2-5 burns and 7,972 fatalities with burns. For those fatalities where a medically-determined cause of death was reported, over half (57 percent) of the fatalities with burns died from their burns. If this proportion were consistent throughout the NASS sample, 4,544 of the fatalities with burns would have died due to fire (0.57 x 7,972 = 4,544). Dividing this number into the number of burn injuries in all crashes results in a burn injury-to-burn fatality ratio of 0.68 for the entire light vehicle fleet, which is close to the 0.75 ratio computed in the preceding paragraph.

---

[13] Susan Partyka, "Fires and Burns in Towed Light Passenger Vehicle Crashes," NHTSA, July 21, 1992 (EA 02450).

[14] AIS (Abbreviated Injury Scale) is a graduated scale system for assigning a numeric value to indicate the severity of an injury. The scale range is from one (minor) to six (fatal).

O. CRASH SEVERITY

The laboratory tests performed for ODI indicated that in a side crash in which a full-sized 1991 Chevrolet Caprice struck a subject vehicle at 50 mph, there was fuel tank leakage from the subject vehicle. An identical test with a Ford truck did not result in tank leakage. The ODI crash testing also demonstrated that a variety of crash parameters affect the likelihood of fuel tank leakage, including crash speed, mass of the impacting object, geometrical shape of the impacting object at the collision interface, and stiffness of the impacting object.

The 50-mph impact by the Caprice resulted in a speed change during the crash, known as delta-V, of approximately 24 mph for the GM truck. This is considerably higher than the 9-mph delta-V that results from an FMVSS No. 301 side-impact barrier test of a GM pickup. Additionally, the energy absorbed by the GM truck in the 50-mph test, which is also a measure of the severity of a crash, was considerably higher than in an FMVSS No. 301 side-impact test. In the 50-mph Caprice crash tests, the GM truck absorbed approximately 114,000 ft-lbs of energy, compared to approximately 27,000 ft-lbs in an FMVSS No. 301 side-impact test.

Although the ODI crash tests indicated that tank leakage in the subject vehicles occurred at high levels of delta-V and absorbed energy, this did not preclude the possibility that leaks could occur at lower levels. Because laboratory testing to assess the likelihood of fuel tank leakage under all crash conditions would be prohibitively expensive, time consuming, and subject to the variations associated with crash testing, ODI concluded that the best approach to further assess the relationship between crash severity and tank leakage was to review available information about real-world crashes of GM and Ford pickup trucks that had been in side collisions involving fire in which an occupant was fatally injured.

ODI analyzed 135 PARs from fatal, side-impact, fire-involved crashes involving the subject vehicles and 17 such crashes involving comparable Ford pickups.[15] The crashes represent a wide variety of crash conditions, including both vehicle-to-fixed object and vehicle-to-vehicle crashes. The impacting vehicles include various sizes of passenger cars, light trucks, medium trucks, heavy trucks including tractor-trailers, and trains.

The diagrams of the crash scene and the crash description in each PAR were used to estimate pre-impact travel speeds and relative velocity vectors for the vehicles involved. For vehicle-to-fixed object crashes, it was necessary to estimate the speed of the pickup truck at impact in order to calculate the change in velocity (delta-V); i.e., the change in velocity equalled the travel speed. For vehicle-to-vehicle crashes, it was necessary to ascertain the impact speeds

---

[15] This disparity in the number of crashes analyzed is due to two factors. First, there have been far more side-impact, fire-related fatal crashes involving the subject vehicles. Second, the PARS for crashes involving the subject vehicles were obtained from a variety of sources including FARS, GM, the Association of Trial Lawyers of America, the CAS, and various private attorneys, while those for the crashes involving the Ford pickups came only from FARS.

and weights for both vehicles. These speeds were then used with the weights of the vehicles involved to estimate the delta-V of the pickup truck in each crash.

Figures 4 and 5 present the results of this analysis for GM and Ford pickups, respectively. The figures depict the percentage of fire-related, fatal side-impact crashes within five mph delta-V increments for each of these vehicles. Also shown is the 24 mph delta-V obtained in the ODI 50-mph crash test of a subject vehicle that resulted in a fuel tank leak. This indicates that a 50-mph crash is at the lower end of the range of crash severity necessary to cause a fire due to a fuel tank leak in both the subject vehicles and the Ford pickups; i.e., approximately 65 percent of the GM crashes and 94 percent of the Ford crashes analyzed by ODI had delta-V values above 24 mph.

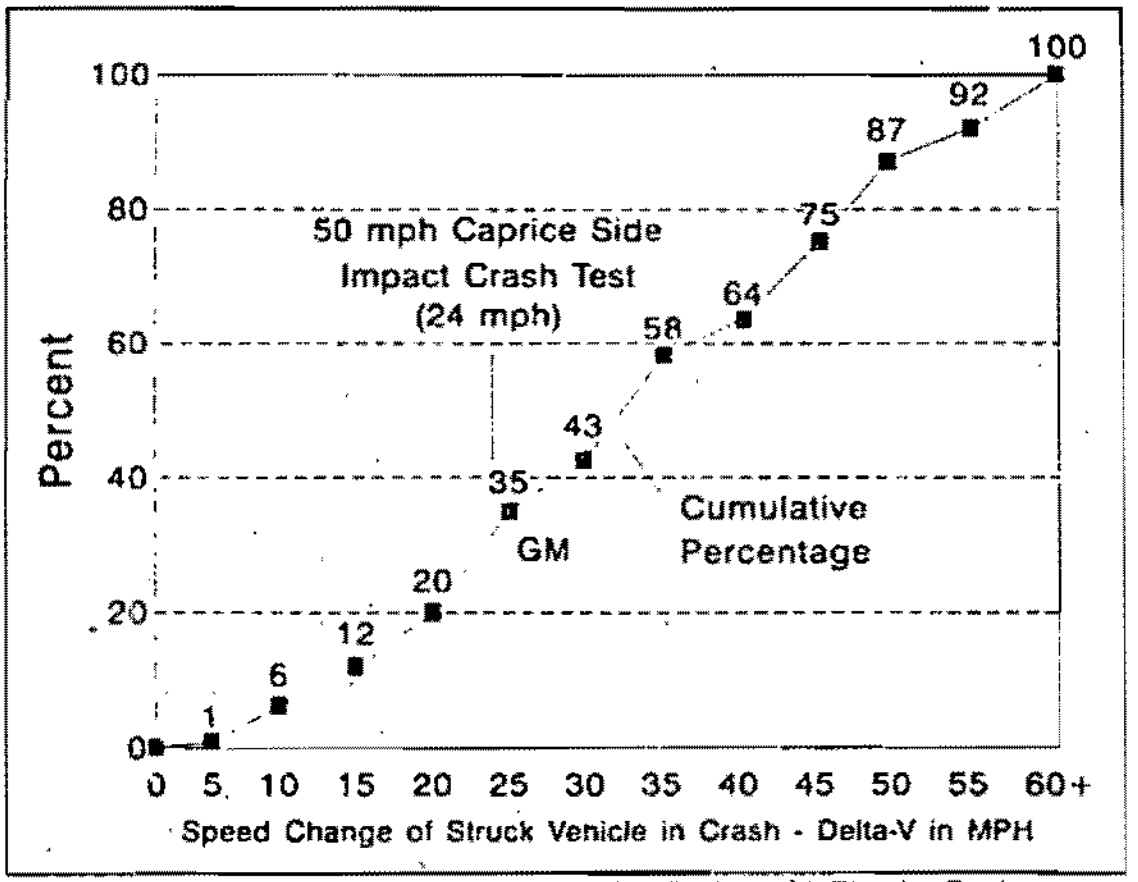

Figure 4. Percent of GM Pickup Truck Fatal Side Crashes with Fire, by Crash Severity (Delta-V in mph).

06-167

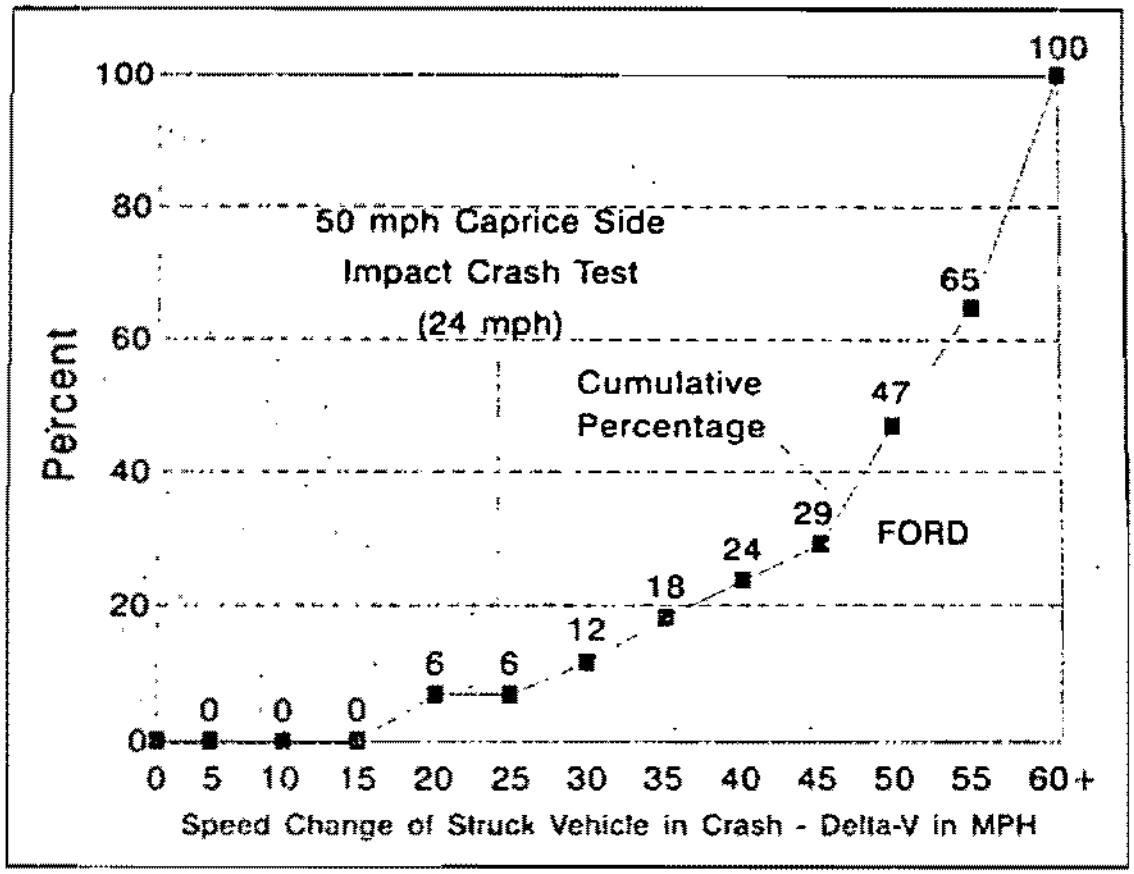

Figure 5. Percent of Ford Pickup Truck Fatal Side Crashes with Fire, by Crash Severity (Delta-V in mph).

Figure 6 presents the GM and Ford data together. Because of the limited number of Ford crashes available for analysis, ODI recognizes that the graph of the Ford data may not be a precise reflection of the delta-V experienced by Ford pickups in fire-related fatal crashes. Nevertheless, ODI believes that these graphs provide a valid indication that, in general, the crash severity needed to cause a fire in a fatal side-impact crash involving a Ford pickup is greater than that needed to cause a fire in such a crash involving the subject vehicles.

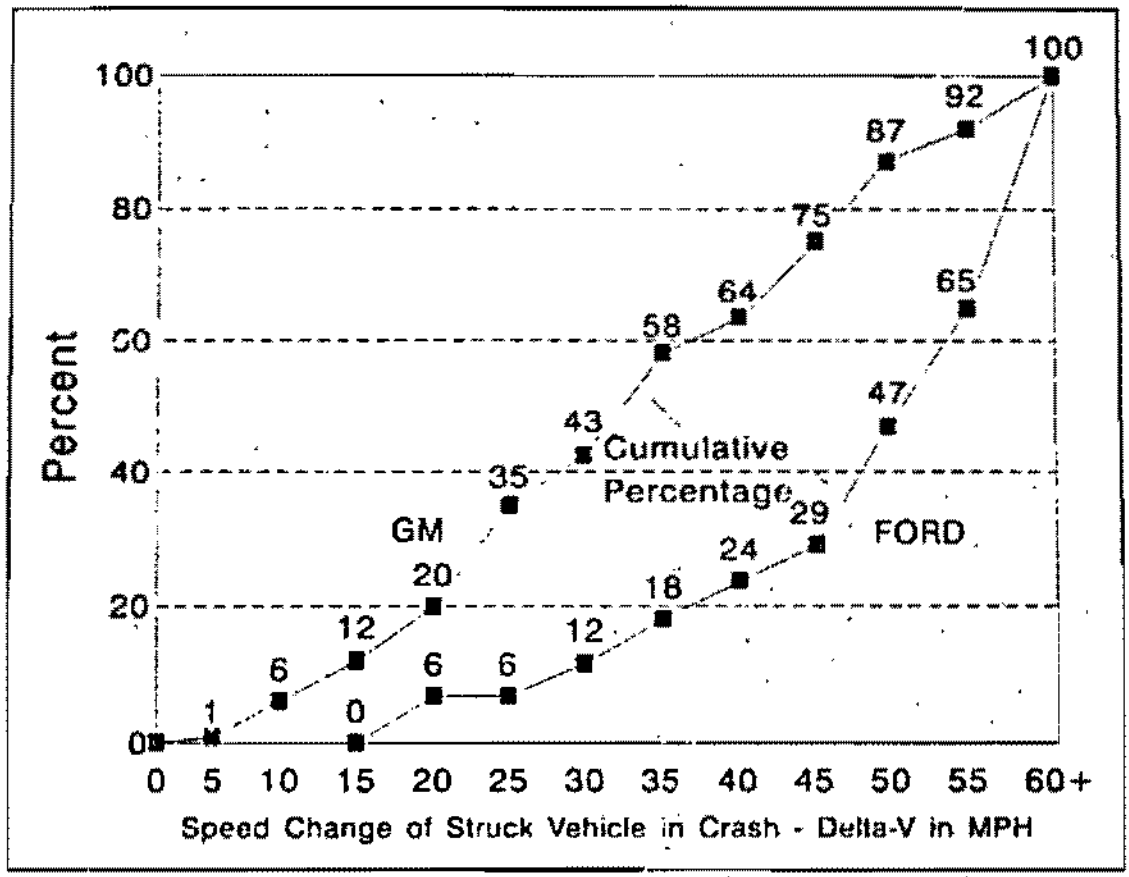

Figure 6. Percent of GM and Ford Pickup Truck Fatal Side Crashes with Fire, by Crash Severity (Delta-V in mph).

These data indicate that the average crash severity for the GM truck in fatal side-impact crashes with fire is at a delta-V of 36 mph, while the Ford delta-V average is 55 mph. Thus, while fatal side-impact crashes with fire involving the subject vehicles occur at extremely high levels of crash severity, and at severity levels far in excess of that associated with a FMVSS No. 301 side-impact test, those severity levels are often below those required to create a post-crash fire in the Ford pickups.

062169

P. THE REASONABLENESS OF THE FUEL SYSTEM DESIGN IN THE SUBJECT VEHICLES

The preceding sections of this report demonstrate that there is an increased risk of death and injury due to fire in side-impact crashes involving the subject vehicles compared to the risk of such deaths and injuries in side-impact crashes involving similar pickup trucks with fuel tanks located between the frame rails. Moreover, since that increased risk cannot be attributed to demographic or behavioral factors, it appears to be associated with the side-mounted fuel tank design in the subject vehicles. However, in considering whether that design constitutes a defect that relates to motor vehicle safety within the meaning of the Safety Act, it is necessary to consider whether that design creates an unreasonable risk of deaths and injuries; in other words, whether the increased risk associated with that design is unreasonable under the circumstances.

In addition to the existence and the absolute magnitude of the increased risk, other factors that are relevant to such a reasonableness inquiry are: (1) what GM knew about the safety risk associated with side-mounted fuel tanks at the time it was designing the subject vehicles in the early 1970s, (2) the information regarding the increased risk of the side-mounted tanks that became available to GM during the fifteen years that the subject vehicles were produced, and (3) the availability of alternative feasible fuel system designs that presented a lesser safety risk.

This reasonableness inquiry has elements that are similar to the criteria that are applied by courts in product liability actions; i.e., courts find that a product is "unreasonably dangerous" if a reasonable person would conclude that the danger that could have been avoided, given the information available to the manufacturer and the state of the art at the time, outweighs the financial cost of preventing the danger, the loss of benefits associated with the alternative design, and any new or additional danger created by the alternative design. See generally, Prosser and Keeton on Torts, 5th ed. (1987) at 699; Restatement 2d of Torts, §402A.

P.1 GM's Awareness of the Potential Safety Consequences of Side-Mounted Fuel Tanks

a. Information Available to GM During the Design of the Subject Vehicles

There are a number of internal GM documents dating from the 1960s that reflect GM's awareness that a side-mounted location for the fuel tanks on the subject vehicles had the potential to create a greater risk of post-crash fires than a between-the-frame-rails design. For example, in a 1964 memorandum addressing a variety of safety improvements to be incorporated into the design of the next generation of C/K pickups (at that time scheduled for MY 1967), Alexander Mair, the Executive Engineer for the Chevrolet Truck Department stated, "The fuel tank must be mounted outside the cab and as near the center of the vehicle as practical." EA 053520.

GM's internal design criteria that were in effect when the subject vehicles were being designed described design features for fuel tank location that called for "sufficient crush space between the rear bumper and the tank" to avoid a tank rupture in a rear crash and the avoidance of "puncture-producing surroundings." "Design Direction No. 8-A" (page 00156), which was applicable to all GM vehicles (including pickup trucks) introduced during or after MY 1971. While these "design directions" are "objectives" rather than binding requirements, they demonstrate that GM recognized that vehicles that did not satisfy these criteria were more vulnerable to post-crash fuel leaks.

The side-mounted location of the fuel tanks in the subject vehicles does not satisfy the spirit of the first of these criteria, since there is no crush space between the side sheet metal and the tank.[16] The design is also inconsistent with the second criterion, since the tanks are clearly vulnerable to punctures in side crashes, both from objects on a striking object and from sharp objects surrounding the tank on the trucks themselves. See section M.4 of this Report.

DD-8-A also provided that maximum fuel leakage amounts for frontal, rear, and side impacts at 30 mph. GM has consistently claimed that the C/K trucks satisfied this "30-30-30" mph criterion (see, e.g., GM's October 9, 1992 response, DP #12, at 41, 45, and 46; testimony of James McDonald in Moseley v. General Motors, DP Exhibit 5.5, at 14137-14138). However, GM did not conduct 30-mph crash tests on production models of the subject vehicles prior to releasing them for sale, and several of the tests of prototype models with tanks mounted outside of the frame rails resulted in leaks.[17] In addition, leaks occurred in at least two 30-mph side-impact tests that GM performed on these trucks in late 1972 and early 1973, soon after it started selling the subject vehicles to the public.[18]

The development of the 30-30-30 criterion is discussed in a February 15, 1972 memorandum prepared by James Steger, a GM engineer (EA 057582). It is also discussed in a 1972 report by Ronald Elwell, Mr. Steger, and Paul Judson, three GM engineers, which states that fuel leaks "should not occur" in collisions which produce occupant impact forces below the level that would cause a fatality in the absence of fire (EA 057590).

---

[16] Since the vast majority of vehicles covered by DD-8-A had fuel tanks in the rear, it refers to the space between the tank and the rear bumper. However, the same safety considerations would appear to apply to the side-mounted fuel tanks.

[17] For example, Test C-2509, 9/22/71 (30 mph frontal); Test C-2582, 12/7/71 (15.6 mph side barrier); Test C-2587, 1/4/72 (35 mph car-to-truck impact at 45 degrees).

[18] Test C-2806, 9/9/72; and Test C-3045, 5/13/73. In addition, in Test C-2807, 9/9/72, although there was no tank leak, there was a slight leak at the fuel filler cap from a pickup equipped with a metal shield that appears to cover the bottom and a portion of the sides of the tank.

b. Information that Became Available to GM During the Time the Subject Vehicles Were Being Produced

The extent of GM's knowledge of the safety risk associated with this design in later years is relevant to this investigation for two distinct reasons. First, GM had the opportunity to revise the fuel system design of the subject vehicles long before it did so in MY 1988, and the reasonableness of its decision not to make such a change is dependent to some degree upon the information available to the company. Second, the extent of GM's ongoing knowledge about the performance of these trucks in side-impact crashes is relevant to the issue of whether GM violated 49 U.S.C. § 30118(c) (formerly section 151 of the Safety Act), which provides that a manufacturer that determines, or in good faith should determine, that its vehicles contain a safety-related defect must promptly notify NHTSA of the defect and provide an appropriate remedy to owners.

The initial indication that the fuel system integrity performance of the subject vehicles was unsatisfactory came soon after the vehicles were initially sold to the public. As noted above, Test C-2806, a 30-mph side-impact test conducted in early September 1972, resulted in a tank leak. This test, among other things, apparently led GM to consider placing a metal shield around the fuel tank to "[p]rovide additional side protection to the fuel tank" of the subject vehicles. See Design Work Order (DWO) 36109-4 (DP Exhibit 6.2, at page 736).

DWO 36109-4 was issued on August 3, 1972, prior to the two September 1972 tests that resulted in leaks. Its original "subject" was "Reinforce Fuel Tank Straps," and the "work to be accomplished" was described as "Redesign fuel tank straps so that a high rate system is provided around the fuel tank side area." Although DWO 36109-4 does not identify the factors that led to its issuance, it may have resulted from two 30-mph frontal tests of prototype vehicles: C-2369 (no tank leak) and C-2509 (tank leak from sending unit) in which there was tank movement and strap slippage. As demonstrated by the "Design Log" that accompanied the DWO (at page 737), work was not started on the project until September 13, 1972, and before much work had been done, its objective was changed, as indicated in the designer's October 16, 1972 notes (at page 738): "[B.F.] Boehm [who at the time was Assistant Staff Engineer - Chassis within Chevrolet's Truck Division] wants some proposals made for a shield to cover top and side of entire tank. He wants something that will relay impact force to frame if struck on the side." It seems likely that this change in direction was motivated, at least in part, by the tank leak in the September side-impact test.

Following completion of the design work on this DWO, on January 31, 1973, GM tested a MY 1973 Chevrolet C20 pickup truck equipped with the steel shield in a 30 mph side-impact, with no leak (Test C-2949). Notwithstanding the previous test failures, GM did not modify the design of the subject vehicles to equip them with a steel shield, or make any other

product improvement at that time.[19] Mr. Elwell testified in Moseley v. General Motors that he was told by George Kendro, the GM engineer in charge of the fuel storage system for the subject vehicles, that James McDonald, who was General Manager of the Chevrolet Division at the time and later President of GM, had "ordered him to stop any further work on those steel shields because it would produce the wrong image to the public . . . ."

GM also performed at least two internal analyses of the post-crash performance of the subject vehicles. The first of these was prepared by F.K. Miller in June 1974, less than two years after they were first sold (EA 053609). Using the limited data available at that time, the analysis compared pre-1973 pickups to the subject vehicles (with respect to fuel leakage as well as other crash aspects). The key finding with respect to the pending investigation is that in accidents where at least one occupant was injured, "The frequency of fuel leaks has not changed. However, given a fuel leak has occurred, the 1973 trucks had more fuel leaks from the fuel tanks than did the pre-1973 pickups."

The second such GM analysis was a study of the post-crash fuel fire performance of 1973-1976 C/K pickups in real-world accidents that was prepared in September 1978 by George Garvil, a member of the Field Accident Research Group within GM's Automotive Safety Engineering Division (EA 053623). The purpose of the study was to assess the relative merits of possible fuel tank locations under consideration for the next generation of C/Ks (which at that time was planned for MY 1981 or MY 1982) based upon a review of accident data. Mr. Garvil concluded that "while the data appear to favor a rear-located tank, it should be considered that a side-located tank . . . inboard of the frame . . . might become as effective as a rear-located tank." The report also noted that 19 percent of the side impacts reviewed were judged to have a "high fuel tank leakage potential for outboard side-located tanks. Moving these side tanks inboard might eliminate most of these potential leakers." Although the report was presented to the GM Design Staff, no action was taken, and no changes were made to the overall design of the trucks until MY 1988.[20]

---

[19] As discussed in section G and Appendix A of this Report, GM made several modifications to the design of the subject vehicles during the years they were in production in order to improve their fuel system integrity performance in side impacts. On none of those occasions did GM conduct a recall to improve the performance of the vehicles that had previously been sold to the public. GM asserts that such recalls were not required because the vehicles did not contain a safety defect.

[20] Several years later, in January 1983, Mr. Garvil prepared a memo "to correct some misimpressions" created by his 1978 study (DP #14, Attachment 3i, Exhibit 6.8, page 92). In that memo he stated that "it is much less important where the tank is placed than how it is placed. In conclusion, a rear tank location does have the advantage of fewer heavy impacts, but this advantage is not a major one." Id. at 93.

In 1981, GM embarked upon a series of 50-mph vehicle-to-vehicle side-impact tests of the subject vehicles under its "Corporate Product Performance Objective" (CPPO) program in an effort to "enhance the ability of the fuel storage system to manage significantly greater levels of energy." See section L.1. These tests clearly demonstrated the vulnerability of the subject vehicles to significant fuel leakage in 50-mph side impacts, even when a variety of "enhancements" were added in an effort to improve post-crash fuel system performance. GM ultimately incorporated three of these enhancements into the trucks beginning in MY 1984, but did not conduct a recall to add them to the earlier models.

Beginning in 1983, there are a number of documents indicating that GM decided to move the fuel tanks inside the frame rails in the next generation of C/K pickups (which did not appear until MY 1988) in order to reduce the likelihood of post-crash fires. For example, at an October 1983 meeting of GM's Safety Review Board, it was noted that the fuel tank(s) of the new vehicle would be inside the frame rails and that "protection of the fuel system will be the major objective" (EA 063641). Similarly, a December 1983 meeting of GM's Product Policy Group noted that "the fuel tank will be relocated inside the frame rails, ahead of the rear axle - a much less vulnerable location than today's tanks" (EA 053655).

Later, in May 1985, after the design of the new C/Ks was well underway, Mike Juras, the chief engineer for that project, advised GM's President, James McDonald, that the existing design "is subject to intense pressure as a result of litigation due to post crash fuel fed fires. With the tank [of the new truck] located inside the frame rail . . . we are reducing this concern" (EA 053679). Also, a 1988 GM sales brochure for the new C/K pickups stated, "The fuel tanks are mounted inside the frame to reduce the chance of fuel spillage upon side impact" (EA 053703).

It is also noteworthy that, beginning in the mid-1970s, GM had to defend a growing number of lawsuits arising out of post-crash fires in which the side-mounted tank design was claimed to be defective. Although GM consistently opposed such allegations, these lawsuits certainly provided additional notice to GM of a possible problem associated with this fuel system design.

P.2 The Feasibility of Alternative Designs

An alternative is considered feasible in the products liability context if a reasonable person would conclude that the danger that could have been avoided, given the technical knowledge available to the manufacturer and the state of the art at the time, outweighs the financial cost of preventing the danger, the loss of benefits associated with the alternative design, and any new or additional danger created by the alternative design.

In applying these factors, there is, first, no doubt that a between-the-frame-rails design for fuel tanks in full-sized pickups was within the state of the art in the early 1970s, as evidenced by the fact that Ford utilized that design in most of its new MY 1973 pickups. (Dodge began to incorporate this design in its pickups as a standard feature two years later.) Moreover, GM considered such designs at the time, but rejected them for marketing reasons

rather than safety or engineering reasons.[21] Second, it appears, and GM has not suggested otherwise, that there would have been little or no additional cost associated with a between-the-rails design.

GM has asserted that equipping the subject vehicles with side-mounted tanks led to benefits to its customers that would not have been available with a between-the-rails design (October 9, 1992 response, DP #12, at 41, 44-48). It notes that by retaining a 34-inch frame rail separation, "body builders" could continue to install the same components on new C/K chassis that they had on the previous, pre-1973 version. The company also asserts that, given the limited space between the frame rails resulting from the decision to retain the 34-inch separation, it was necessary to place the tanks outside the frame rails to achieve the fuel capacity (40 gallons) needed to provide the driving range desired by some of its customers. However, beginning in MY 1974, GM offered a between-the-frame-rails 40-gallon fuel tank as optional equipment on its Suburban vehicles, which also had a 34-inch frame rail separation, and considered such a design for the subject vehicles as early as 1971 (see DP Exhibit 6.2, at page 608).[22]

Finally, there is no evidence that placing fuel tanks inside the frame rails would have created any additional danger. GM has stated that one reason it did not place the fuel tanks between the frame rails and forward of the rear axle was "concerns about placing a fuel tank in close proximity to a spinning drive shaft" (October 9, 1992 response, DP #12, at 47). However, there have been extremely few, if any, fires resulting from such a scenario since the tanks were moved inside the frame rails in MY 1988, and no indication that GM was aware of any such incidents at the time it was designing the subject vehicles.

Q. FINDINGS

1. There are no data on which to conclude that the GM trucks to which FMVSS No. 301 applied, when new, did not comply with the standard.

2. There are no data to indicate a relationship between fuel tank corrosion and increased fire risk in the subject vehicles, either in side impacts or in non-crash incidents.

3. Based on a review of 1979-1993 accident data reflecting the performance of full-sized pickups in side-impact fatal crashes involving fire, occupants of the subject vehicles experienced 2.8 times as many fire-related fatalities (i.e., fatalities in crashes in which a fire occurred) per million registered vehicle-years as occupants of Ford pickups and

---

[21] See, in general, GM's October 9, 1992 response, at 44, 46; see also, for example, the testimony of Earl Stepp, chief engineer of trucks for Chevrolet, in Romine v. General Motors (DP #14, Attachment 2, Part F, Exhibit 5.5, at page 18702).

[22] The fuel tank on the Suburban was behind the rear axle, which is where GM placed the spare tire for the subject vehicles.

2.5 times as many as occupants of Dodge pickups. Where the FARS code indicated that the most harmful event (MHE) of the crash was fire, the GM-to-Ford occupant fatality per million registered vehicle-years ratio is 3.4 to 1, and the GM-to-Dodge ratio is 6.1 to 1.

4. Apart from the basic decision to locate the fuel tanks of the subject vehicles outside of the frame rails, many of the specific features of the design of the fuel storage system and the surrounding area have increased the likelihood of post-crash fuel fires in the subject vehicles.

5. Real-world accident data do not support GM's contention that GM and Ford pickup trucks have comparable side-impact fire performance and that differences in driver demographics and driver behavior explain the difference in the rates of fire-related and MHE=fire fatalities in side-impact crashes for the GM and Ford pickups. This is demonstrated by the tremendous reduction in the rate of MHE=fire side-impact fatalities that occurred after GM moved the fuel tanks for these pickups inside the frame rails in model year 1988.

6. Contrary to GM's contentions, the MHE coding in FARS is a reliable indicator of the number of fatalities actually caused by fire.

7. FARS data indicate that, if past trends continue, there would be approximately five additional fatalities due to fire in side-impact crashes in 1994 compared to what would occur if the subject vehicles had the same side-impact fire performance as Ford full-sized pickups.

8. Reports of non-fatal burn injuries indicate that, if past trends continue, there would be three to four additional non-fatal burn injuries in 1994 in side-impact crashes involving the subject vehicles compared to the Ford pickups.

9. Laboratory crash data indicate that, at certain impact speeds and configurations, the subject vehicles will leak fuel in side impacts, while comparable Ford pickups will not.

10. While the crash severities in fatal side-impact, fire-involved crashes involving the subject vehicles are far in excess of the severity specified in FMVSS No. 301, they are generally less than the severities that result in fires in fatal side-impact crashes involving the Ford pickups.

11. GM was aware at the time it designed the subject vehicles in the early 1970s that side-mounted fuel tank design presented an increased risk of post-crash fuel fed fires in side impacts, compared to the risk associated with other feasible alternative designs. Moreover, GM obtained additional information demonstrating the increased risk associated with the side-mounted tanks during the 15-year period the subject vehicles were in production.

R. CONCLUSIONS

1. The increased risk of death and injury from fire in side-impact crashes involving the subject vehicles is a result of the design of their fuel storage system, primarily the location of the fuel tanks outside of the frame rails, supplemented by other features of the design.

2. Given the state of the art at the time and GM's awareness of the likely consequences, it was unreasonable for GM to design the subject vehicles with fuel tanks outside the frame rails.

3. The increased safety risk due to post-crash fires in the subject vehicles is unreasonable.

Therefore, on the basis of the entire investigative record, I have initially decided, pursuant to 49 U.S.C. § 30118(a) (formerly section 152(a) of the National Traffic and Motor Vehicle Safety Act), that the subject vehicles contain a defect that relates to motor vehicle safety.

Federico Peña

Federico Peña

U.S. Bilateral Civil Aviation Agreements

		New/Expanded Agreements in the Current Administration			
#	Year	Month	Entity	Remarks	Total # of Open Skies*
89	2000	10	Malta	Open Skies Agreement	#50
88	2000	10	Rwanda	Open Skies Agreement	#49
87	2000	10	Morocco	Open Skies Agreement	#48
86	2000	8	Nigeria	Open Skies Agreement	#47
85	2000	5	The Gambia	Open Skies Agreement	#46
84	2000	3	Turkey	Open Skies Agreement	#45
83	2000	3	Ghana	Open Skies Agreement	#44
82	2000	3	Colombia	Routes, freqs, all-cargo rights	
81	2000	3	Vietnam	Codesharing	
80	2000	2	Burkina Faso	Open Skies Agreement	#43
79	2000	2	Namibia	Open Skies Agreement	#42
78	2000	1	Slovak Republic	Open Skies Agreement	#41
77	1999	12	Portugal	Open Skies Agreement	#40
76	1999	12	Australia	All-Cargo Open Skies	
75	1999	12	Dominican Republic	Open Skies Agreement	#39
74	1999	11	Tanzania	Open Skies Agreement	#38
73	1999	10	Qatar	Open Skies Agreement	#37
72	1999	8	Argentina	Open Skies Agreement	#36
71	1999	5	Bahrain	Open Skies Agreement	#35
70	1999	4	United Arab Emirates	Open Skies Agreement	#34
69	1999	4	Pakistan	Open Skies Agreement	#33
68	1999	4	China	Capacity,routes,codesharing,designation	
67	1999	1	Mexico	Codesharing, simpler filings	
66	1999	1	Russia	Rtes,freqs,ovrflt,codeshare	
65	1998	11	Italy	Open Skies Agreement	#32
64	1998	5	Peru	Open Skies Agreement	#31
63	1998	4	Korea	Open Skies Agreement	#30
62	1998	4	France	Major Liberalization	
61	1998	2	Uzbekistan	Open Skies Agreement	#29
60	1998	1	Japan	Add'l airlines, freqs, routes	
59	1997	12	Netherlands Antilles	Open Skies Agreement	#28
58	1997	12	Romania	Open Skies Agreement	#27
57	1997	10	Chile	Open Skies Agreement	#26
56	1997	10	Brazil	Scheduled capacity, charters	
55	1997	7	Aruba	Open Skies Agreement	#25
54	1997	6	Egypt	Codesharing, 5th Fr. improvements	
53	1997	6	Malaysia	Open Skies Agreement	#24

U.S. Bilateral Civil Aviation Agreements

52	1997	5	New Zealand	Open Skies Agreement	#23
51	1997	5	Ukraine	New Agreement	
50	1997	5	Nicaragua	Open Skies Agreement	#22
49	1997	4	Costa Rica	Open Skies Agreement	#21
48	1997	4	Honduras	Open Skies Agreement	#20
47	1997	4	El Salvador	Open Skies Agreement	#19
46	1997	4	Guatemala	Open Skies Agreement	#18
45	1997	3	Panama	Open Skies Agreement	#17
44	1997	3	Taiwan	Open Skies Agreement	#16
43	1997	2	Brunei	Open Skies Agreement	#15
42	1997	1	Singapore	Open Skies Agreement	#14
41	1996	11	Jordan	Open Skies Agreement	#13
40	1996	10	Brazil	Add'l carrier, freqs, charters	
39	1996	8	Pakistan	New Agreement	
38	1996	3	South Africa	New Agreement	
37	1996	3	Japan	All-Cargo Liberalization	
36	1996	3	France	Boston-Paris route; future talks	
35	1996	3	Poland	Expanded routes, code sharing	
34	1996	2	Germany	Open Skies Agreement	#12
33	1996	1	Thailand	New agreement	
32	1996	1	Fiji	routes/flexibility,codeshare,charters,pricing	
31	1995	12	China	Detroit,codesharing, etc.	
30	1995	12	Czech Republic	Open Skies Agreement	#11
29	1995	12	India		
28	1995	10	Macau	New agreement	
27	1995	10	Philippines		
26	1995	9	Hong Kong	New agreement	
25	1995	6	Brazil		
24	1995	6	United Kingdom		
23	1995	5	Austria	Open Skies Agreement	#10
22	1995	5	Belgium	Open Skies Agreement	#9
21	1995	5	Denmark	Open Skies Agreement	#8
20	1995	5	Finland	Open Skies Agreement	#7
19	1995	5	Iceland	Open Skies Agreement	#6
18	1995	5	Luxembourg	Open Skies Agreement	#5
17	1995	5	Norway	Open Skies Agreement	#4
16	1995	5	Peru		
15	1995	5	Sweden	Open Skies Agreement	#3
14	1995	5	Switzerland	Open Skies Agreement	#2
13	1995	4	Ukraine	New agreement	
12	1995	2	Canada	New agreement	
11	1994	10	Germany	Amendment	

U.S. Bilateral Civil Aviation Agreements

10	1994	7	Argentina	Capacity increase	
9	1994	7	Austria	routes, desigs	
8	1994	2	United Kingdom	BAA Arbitration	
7	1994	1	Jamaica	Code sharing agreed	
6	1993	12	Australia		
5	1993	11	Finland	routes	
4	1993	10	Ireland		
3	1993	9	Germany	Capacity Agreement	
2	1993	5	Italy	mini-deal DL,UA behind gateway	
1	1993	5	Russia		
		(*numbering includes first open-skies agreement with Netherlands in 1992.)			

January 4, 2001

AIR TRANSPORT AGREEMENT

BETWEEN

THE GOVERNMENT OF

THE UNITED STATES OF AMERICA

AND

THE GOVERNMENT OF

[country]

The Government of the United States of America and the Government of [country] (hereinafter, "the Parties");

Desiring to promote an international aviation system based on competition among airlines in the marketplace with minimum government interference and regulation;

Desiring to facilitate the expansion of international air transport opportunities;

Desiring to make it possible for airlines to offer the traveling and shipping public a variety of service options at the lowest prices that are not discriminatory and do not represent abuse of a dominant position, and wishing to encourage individual airlines to develop and implement innovative and competitive prices;

Desiring to ensure the highest degree of safety and security in international air transport and reaffirming their grave concern about acts or threats against the security of aircraft, which jeopardize the safety of persons or property, adversely affect the operation of air transportation, and undermine public confidence in the safety of civil aviation; and

Being Parties to the Convention on International Civil Aviation, opened for signature at Chicago on December 7, 1944;

Have agreed as follows:

Article 1

Definitions

For the purposes of this Agreement, unless otherwise stated, the term:

1. "Aeronautical authorities" means, in the case of the United States, the Department of Transportation, or its successor, and in the case of [country], the [appropriate officials], and any person or agency authorized to perform functions exercised by the said [appropriate officials];

2. "Agreement" means this Agreement, its Annexes, and any amendments thereto;

3. "Air transportation" means the public carriage by aircraft of passengers, baggage, cargo, and mail, separately or in combination, for remuneration or hire;

4. "Convention" means the Convention on International Civil Aviation, opened for signature at Chicago on December 7, 1944, and includes:

a. any amendment that has entered into force under Article 94(a) of the Convention and has been ratified by both Parties, and

b. any Annex or any amendment thereto adopted under Article 90 of the Convention, insofar as such Annex or amendment is at any given time effective for both Parties;

5. "Designated airline" means an airline designated and authorized in accordance with Article 3 of this Agreement;

6. "Full cost" means the cost of providing service plus a reasonable charge for administrative overhead;

7. "International air transportation" means air transportation that passes through the airspace over the territory of more than one State;

8. "Price" means any fare, rate or charge for the carriage of passengers (and their baggage) and/or cargo (excluding mail) in air transportation charged by airlines, including their agents, and the conditions governing the availability of such fare, rate or charge;

9. "Stop for non-traffic purposes" means a landing for any purpose other than taking on or discharging passengers, baggage, cargo and/or mail in air transportation;

10. "Territory" means the land areas under the sovereignty, jurisdiction, protection, or trusteeship of a Party, and the territorial waters adjacent thereto; and

11. "User charge" means a charge imposed on airlines for the provision of airport, air navigation, or aviation security facilities or services including related services and facilities.

Article 2

Grant of Rights

1. Each Party grants to the other Party the following rights for the conduct of international air transportation by the airlines of the other Party:

a. the right to fly across its territory without landing;

b. the right to make stops in its territory for non-traffic purposes; and

c. the rights otherwise specified in this Agreement.

2. Nothing in this Article shall be deemed to confer on the airline or airlines of one Party the rights to take on board, in the territory of the other Party, passengers, their baggage, cargo, or mail carried for compensation and destined for another point in the territory of that other Party.

Article 3

Designation and Authorization

1. Each Party shall have the right to designate as many airlines as it wishes to conduct international air transportation in accordance with this Agreement and to withdraw or alter such designations. Such designations shall be transmitted to the other Party in writing through diplomatic channels, and shall identify whether the airline is authorized to conduct the type of air transportation specified in Annex I or in Annex II or both.

2. On receipt of such a designation, and of applications from the designated airline, in the form and manner prescribed for operating authorizations and technical permissions, the other Party shall grant appropriate authorizations and permissions with minimum procedural delay, provided:

a. substantial ownership and effective control of that airline are vested in the Party designating the airline, nationals of that Party, or both;

b. the designated airline is qualified to meet the conditions prescribed under the laws and regulations normally applied to the operation of international air transportation by the Party considering the application or applications; and

c. the Party designating the airline is maintaining and administering the standards set forth in Article 6 (Safety) and Article 7 (Aviation Security).

Article 4

Revocation of Authorization

1. Either Party may revoke, suspend or limit the operating authorizations or technical permissions of an airline designated by the other Party where:

a. substantial ownership and effective control of that airline are not vested in the other Party, the Party's nationals, or both;

b. that airline has failed to comply with the laws and regulations referred to in Article 5 (Application of Laws) of this Agreement; or

c. the other Party is not maintaining and administering the standards as set forth in Article 6 (Safety).

2. Unless immediate action is essential to prevent further noncompliance with subparagraphs 1b or 1c of this Article, the rights established by this Article shall be exercised only after consultation with the other Party.

3. This Article does not limit the rights of either Party to withhold, revoke, limit or impose conditions on the operating authorization or technical permission of an airline or airlines of the other Party in accordance with the provisions of Article 7 (Aviation Security).

Article 5

Application of Laws

1. While entering, within, or leaving the territory of one Party, its laws and regulations relating to the operation and navigation of aircraft shall be complied with by the other Party's airlines.

2. While entering, within, or leaving the territory of one Party, its laws and regulations relating to the admission to or departure from its territory of passengers, crew or cargo on aircraft (including regulations relating to entry, clearance, aviation security, immigration, passports, customs and quarantine or, in the case of mail, postal regulations) shall be complied with by, or on behalf of, such passengers, crew or cargo of the other Party's airlines.

Article 6

Safety

1. Each Party shall recognize as valid, for the purpose of operating the air transportation provided for in this Agreement, certificates of airworthiness, certificates of competency, and

licenses issued or validated by the other Party and still in force, provided that the requirements for such certificates or licenses at least equal the minimum standards that may be established pursuant to the Convention. Each Party may, however, refuse to recognize as valid for the purpose of flight above its own territory, certificates of competency and licenses granted to or validated for its own nationals by the other Party.

2. Either Party may request consultations concerning the safety standards maintained by the other Party relating to aeronautical facilities, aircrews, aircraft, and operation of the designated airlines. If, following such consultations, one Party finds that the other Party does not effectively maintain and administer safety standards and requirements in these areas that at least equal the minimum standards that may be established pursuant to the Convention, the other Party shall be notified of such findings and the steps considered necessary to conform with these minimum standards, and the other Party shall take appropriate corrective action. Each Party reserves the right to withhold, revoke, or limit the operating authorization or technical permission of an airline or airlines designated by the other Party in the event the other Party does not take such appropriate corrective action within a reasonable time.

Article 7

Aviation Security

1. In accordance with their rights and obligations under international law, the Parties reaffirm that their obligation to each other to protect the security of civil aviation against acts of unlawful interference forms an integral part of this Agreement. Without limiting the generality of their rights and obligations under international law, the Parties shall in particular act in conformity with the provisions of the Convention on Offenses and Certain Other Acts Committed on Board Aircraft, signed at Tokyo on September 14, 1963, the Convention for the Suppression of Unlawful Seizure of Aircraft, signed at The Hague on December 16, 1970, the Convention for the Suppression of Unlawful Acts against the Safety of Civil Aviation, signed at Montreal on September 23, 1971, and the Protocol for the Suppression of Unlawful Acts of Violence at Airports Serving International Civil Aviation, done at Montreal on February 24, 1988.

2. The Parties shall provide upon request all necessary assistance to each other to prevent acts of unlawful seizure of civil aircraft and other unlawful acts against the safety of such aircraft, of their passengers and crew, and of airports and air navigation facilities, and to address any other threat to the security of civil air navigation.

3. The Parties shall, in their mutual relations, act in conformity with the aviation security standards and appropriate recommended practices established by the International Civil Aviation Organization and designated as Annexes to the Convention; they shall require that operators of aircraft of their registry, operators of aircraft who have their principal place of business or permanent residence in their territory, and the operators of airports in their territory act in conformity with such aviation security provisions.

4. Each Party agrees to observe the security provisions required by the other Party for entry into, for departure from, and while within the territory of that other Party and to take adequate measures to protect aircraft and to inspect passengers, crew, and their baggage and carry-on items, as well as cargo and aircraft stores, prior to and during boarding or loading. Each Party shall also give positive consideration to any request from the other Party for special security measures to meet a particular threat.

5. When an incident or threat of an incident of unlawful seizure of aircraft or other unlawful acts against the safety of passengers, crew, aircraft, airports or air navigation facilities occurs, the Parties shall assist each other by facilitating communications and other appropriate measures intended to terminate rapidly and safely such incident or threat.

6. When a Party has reasonable grounds to believe that the other Party has departed from the aviation security provisions of this Article, the aeronautical authorities of that Party may request immediate consultations with the aeronautical authorities of the other Party. Failure to reach a satisfactory agreement within 15 days from the date of such request shall constitute grounds to withhold, revoke, limit, or impose conditions on the operating authorization and technical permissions of an airline or airlines of that Party. When required by an emergency, a Party may take interim action prior to the expiry of 15 days.

Article 8

Commercial Opportunities

1. The airlines of each Party shall have the right to establish offices in the territory of the other Party for the promotion and sale of air transportation.

2. The designated airlines of each Party shall be entitled, in accordance with the laws and regulations of the other Party relating to entry, residence, and employment, to bring in and maintain in the territory of the other Party managerial, sales, technical, operational, and other specialist staff required for the provision of air transportation.

3. Each designated airline shall have the right to perform its own ground-handling in the territory of the other Party ("self-handling") or, at its option, select among competing agents for such services in whole or in part. The rights shall be subject only to physical constraints resulting from considerations of airport safety. Where such considerations preclude self-handling, ground services shall be available on an equal basis to all airlines; charges shall be based on the costs of services provided; and such services shall be comparable to the kind and quality of services as if self-handling were possible.

4. Any airline of each Party may engage in the sale of air transportation in the territory of the other Party directly and, at the airline's discretion, through its agents, except as may be specifically provided by the charter regulations of the country in which the charter originates that relate to the protection of passenger funds, and passenger cancellation and refund rights. Each

airline shall have the right to sell such transportation, and any person shall be free to purchase such transportation, in the currency of that territory or in freely convertible currencies.

5. Each airline shall have the right to convert and remit to its country, on demand, local revenues in excess of sums locally disbursed. Conversion and remittance shall be permitted promptly without restrictions or taxation in respect thereof at the rate of exchange applicable to current transactions and remittance on the date the carrier makes the initial application for remittance.

6. The airlines of each Party shall be permitted to pay for local expenses, including purchases of fuel, in the territory of the other Party in local currency. At their discretion, the airlines of each Party may pay for such expenses in the territory of the other Party in freely convertible currencies according to local currency regulation.

7. In operating or holding out the authorized services on the agreed routes, any designated airline of one Party may enter into cooperative marketing arrangements such as blocked-space, code-sharing or leasing arrangements, with

a) an airline or airlines of either Party;

b) an airline or airlines of a third country; [and

c) a surface transportation provider of any country;]

provided that all participants in such arrangements (i) hold the appropriate authority and (ii) meet the requirements normally applied to such arrangements.

8. Notwithstanding any other provision of this Agreement, airlines and indirect providers of cargo transportation of both Parties shall be permitted, without restriction, to employ in connection with international air transportation any surface transportation for cargo to or from any points in the territories of the Parties or in third countries, including transport to and from all airports with customs facilities, and including, where applicable, the right to transport cargo in bond under applicable laws and regulations. Such cargo, whether moving by surface or by air, shall have access to airport customs processing and facilities. Airlines may elect to perform their own surface transportation or to provide it through arrangements with other surface carriers, including surface transportation operated by other airlines and indirect providers of cargo air transportation. Such intermodal cargo services may be offered at a single, through price for the air and surface transportation combined, provided that shippers are not misled as to the facts concerning such transportation.

Article 9

Customs Duties and Charges

1. On arriving in the territory of one Party, aircraft operated in international air transportation by the designated airlines of the other Party, their regular equipment, ground equipment, fuel, lubricants, consumable technical supplies, spare parts (including engines), aircraft stores (including but not limited to such items of food, beverages and liquor, tobacco and other products destined for sale to or use by passengers in limited quantities during flight), and other items intended for or used solely in connection with the operation or servicing of aircraft engaged in international air transportation shall be exempt, on the basis of reciprocity, from all import restrictions, property taxes and capital levies, customs duties, excise taxes, and similar fees and charges that are (a) imposed by the national authorities, and (b) not based on the cost of services provided, provided that such equipment and supplies remain on board the aircraft.

2. There shall also be exempt, on the basis of reciprocity, from the taxes, levies, duties, fees and charges referred to in paragraph 1 of this Article, with the exception of charges based on the cost of the service provided:

a. aircraft stores introduced into or supplied in the territory of a Party and taken on board, within reasonable limits, for use on outbound aircraft of an airline of the other Party engaged in international air transportation, even when these stores are to be used on a part of the journey performed over the territory of the Party in which they are taken on board;

b. ground equipment and spare parts (including engines) introduced into the territory of a Party for the servicing, maintenance, or repair of aircraft of an airline of the other Party used in international air transportation;

c. fuel, lubricants and consumable technical supplies introduced into or supplied in the territory of a Party for use in an aircraft of an airline of the other Party engaged in international air transportation, even when these supplies are to be used on a part of the journey performed over the territory of the Party in which they are taken on board; and

d. promotional and advertising materials introduced into or supplied in the territory of one Party and taken on board, within reasonable limits, for use on outbound aircraft of an airline of the other Party engaged in international air transportation, even when these stores are to be used on a part of the journey performed over the territory of the Party in which they are taken on board.

3. Equipment and supplies referred to in paragraphs 1 and 2 of this Article may be required to be kept under the supervision or control of the appropriate authorities.

4. The exemptions provided by this Article shall also be available where the designated airlines of one Party have contracted with another airline, which similarly enjoys such exemptions from the other Party, for the loan or transfer in the territory of the other Party of the items specified in paragraphs 1 and 2 of this Article.

Article 10

User Charges

1. User charges that may be imposed by the competent charging authorities or bodies of each Party on the airlines of the other Party shall be just, reasonable, not unjustly discriminatory, and equitably apportioned among categories of users. In any event, any such user charges shall be assessed on the airlines of the other Party on terms not less favorable than the most favorable terms available to any other airline at the time the charges are assessed.

2. User charges imposed on the airlines of the other Party may reflect, but shall not exceed, the full cost to the competent charging authorities or bodies of providing the appropriate airport, airport environmental, air navigation, and aviation security facilities and services at the airport or within the airport system. Such charges may include a reasonable return on assets, after depreciation. Facilities and services for which charges are made shall be provided on an efficient and economic basis.

3. Each Party shall encourage consultations between the competent charging authorities or bodies in its territory and the airlines using the services and facilities, and shall encourage the competent charging authorities or bodies and the airlines to exchange such information as may be necessary to permit an accurate review of the reasonableness of the charges in accordance with the principles of paragraphs 1 and 2 of this Article. Each Party shall encourage the competent charging authorities to provide users with reasonable notice of any proposal for changes in user charges to enable users to express their views before changes are made.

4. Neither Party shall be held, in dispute resolution procedures pursuant to Article 14, to be in breach of a provision of this Article, unless (a) it fails to undertake a review of the charge or practice that is the subject of complaint by the other Party within a reasonable amount of time; or (b) following such a review it fails to take all steps within its power to remedy any charge or practice that is inconsistent with this Article.

Article 11

Fair Competition

1. Each Party shall allow a fair and equal opportunity for the designated airlines of both Parties to compete in providing the international air transportation governed by this Agreement.

2. Each Party shall allow each designated airline to determine the frequency and capacity of the international air transportation it offers based upon commercial considerations in the marketplace. Consistent with this right, neither Party shall unilaterally limit the volume of traffic, frequency or regularity of service, or the aircraft type or types operated by the designated airlines of the other Party, except as may be required for customs, technical, operational, or environmental reasons under uniform conditions consistent with Article 15 of the Convention.

3. Neither Party shall impose on the other Party's designated airlines a first-refusal requirement, uplift ratio, no-objection fee, or any other requirement with respect to capacity, frequency or traffic that would be inconsistent with the purposes of this Agreement.

4. Neither Party shall require the filing of schedules, programs for charter flights, or operational plans by airlines of the other Party for approval, except as may be required on a non-discriminatory basis to enforce the uniform conditions foreseen by paragraph 2 of this Article or as may be specifically authorized in an Annex to this Agreement. If a Party requires filings for information purposes, it shall minimize the administrative burdens of filing requirements and procedures on air transportation intermediaries and on designated airlines of the other Party.

Article 12

Pricing

1. Each Party shall allow prices for air transportation to be established by each designated airline based upon commercial considerations in the marketplace. Intervention by the Parties shall be limited to:

a. prevention of unreasonably discriminatory prices or practices;

b. protection of consumers from prices that are unreasonably high or restrictive due to the abuse of a dominant position; and

c. protection of airlines from prices that are artificially low due to direct or indirect governmental subsidy or support.

2. Prices for international air transportation between the territories of the Parties shall not be required to be filed. Notwithstanding the foregoing, the designated airlines of the Parties shall continue to provide immediate access, on request, to information on historical, existing, and proposed prices to the aeronautical authorities of the Parties in a manner and format acceptable to those aeronautical authorities.

3. Neither Party shall take unilateral action to prevent the inauguration or continuation of a price proposed to be charged or charged by (i) an airline of either Party for international air transportation between the territories of the Parties, or (ii) an airline of one Party for international air transportation between the territory of the other Party and any other country, including in both cases transportation on an interline or intraline basis. If either Party believes that any such price is inconsistent with the considerations set forth in paragraph 1 of this Article, it shall request consultations and notify the other Party of the reasons for its dissatisfaction as soon as possible. These consultations shall be held not later than 30 days after receipt of the request, and the Parties shall cooperate in securing information necessary for reasoned resolution of the issue. If the Parties reach agreement with respect to a price for which a notice of dissatisfaction has been given, each Party shall use its best efforts to put that agreement into effect. Without such mutual agreement, the price shall go into effect or continue in effect.

Article 13

Consultations

Either Party may, at any time, request consultations relating to this Agreement. Such consultations shall begin at the earliest possible date, but not later than 60 days from the date the other Party receives the request unless otherwise agreed.

Article 14

Settlement of Disputes

1. Any dispute arising under this Agreement, except those that may arise under paragraph 3 of Article 12 (Pricing), that is not resolved by a first round of formal consultations may be referred by agreement of the Parties for decision to some person or body. If the Parties do not so agree, the dispute shall, at the request of either Party, be submitted to arbitration in accordance with the procedures set forth below.

2. Arbitration shall be by a tribunal of three arbitrators to be constituted as follows:

a. Within 30 days after the receipt of a request for arbitration, each Party shall name one arbitrator. Within 60 days after these two arbitrators have been named, they shall by agreement appoint a third arbitrator, who shall act as President of the arbitral tribunal;

b. If either Party fails to name an arbitrator, or if the third arbitrator is not appointed in accordance with subparagraph a of this paragraph, either Party may request the President of the Council of the International Civil Aviation Organization to appoint the necessary arbitrator or arbitrators within 30 days. If the President of the Council is of the same nationality as one of the Parties, the most senior Vice President who is not disqualified on that ground shall make the appointment.

3. Except as otherwise agreed, the arbitral tribunal shall determine the limits of its jurisdiction in accordance with this Agreement and shall establish its own procedural rules. The tribunal, once formed, may recommend interim relief measures pending its final determination. At the direction of the tribunal or at the request of either of the Parties, a conference to determine the precise issues to be arbitrated and the specific procedures to be followed shall be held not later than 15 days after the tribunal is fully constituted.

4. Except as otherwise agreed or as directed by the tribunal, each Party shall submit a memorandum within 45 days of the time the tribunal is fully constituted. Replies shall be due 60 days later. The tribunal shall hold a hearing at the request of either Party or on its own initiative within 15 days after replies are due.

5. The tribunal shall attempt to render a written decision within 30 days after completion of the hearing or, if no hearing is held, after the date both replies are submitted. The decision of the majority of the tribunal shall prevail.

6. The Parties may submit requests for clarification of the decision within 15 days after it is rendered and any clarification given shall be issued within 15 days of such request.

7. Each Party shall, to the degree consistent with its national law, give full effect to any decision or award of the arbitral tribunal.

8. The expenses of the arbitral tribunal, including the fees and expenses of the arbitrators, shall be shared equally by the Parties. Any expenses incurred by the President of the Council of the International Civil Aviation Organization in connection with the procedures of paragraph 2b of this Article shall be considered to be part of the expenses of the arbitral tribunal.

Article 15

Termination

Either Party may, at any time, give notice in writing to the other Party of its decision to terminate this Agreement. Such notice shall be sent simultaneously to the International Civil Aviation Organization. This Agreement shall terminate at midnight (at the place of receipt of the notice to the other Party) immediately before the first anniversary of the date of receipt of the notice by the other Party, unless the notice is withdrawn by agreement of the Parties before the end of this period.

Article 16

Registration with ICAO

This Agreement and all amendments thereto shall be registered with the International Civil Aviation Organization.

Article 17

Entry into Force

This Agreement and its Annexes shall enter into force on the date of signature.

IN WITNESS WHEREOF the undersigned, being duly authorized by their respective Governments, have signed this Agreement.

DONE at _____, this _____day of _____, 20__, in duplicate, in the English and _____ languages, each text being equally authentic.

FOR THE GOVERNMENT OF
THE UNITED STATES OF AMERICA:

FOR THE GOVERNMENT OF
[country]:

ANNEX I

Scheduled Air Transportation

Section 1

Routes

Airlines of each Party designated under this Annex shall, in accordance with the terms of their designation, be entitled to perform scheduled international air transportation between points on the following routes:

A. Routes for the airline or airlines designated by the Government of the United States:

1. From points behind the United States via the United States and intermediate points to a point or points in [country] and beyond.

[2. For all-cargo service or services, between [country] and any point or points.]

B. Routes for the airline or airlines designated by the Government of [country]:

1. From points behind [country] via [country] and intermediate points to a point or points in the United States and beyond.

[2. For all-cargo service or services, between the United States and any point or points.]

Section 2

Operational Flexibility

Each designated airline may, on any or all flights and at its option:

1. operate flights in either or both directions;

2. combine different flight numbers within one aircraft operation;

3. serve behind, intermediate, and beyond points and points in the territories of the Parties on the routes in any combination and in any order;

4. omit stops at any point or points;

5. transfer traffic from any of its aircraft to any of its other aircraft at any point on the routes; and

6. serve points behind any point in its territory with or without change of aircraft or flight number and may hold out and advertise such services to the public as through services;

without directional or geographic limitation and without loss of any right to carry traffic otherwise permissible under this Agreement; provided that, [with the exception of all-cargo services,] the service serves a point in the territory of the Party designating the airline.

Section 3

Change of Gauge

On any segment or segments of the routes above, any designated airline may perform international air transportation without any limitation as to change, at any point on the route, in type or number of aircraft operated; provided that, [with the exception of all-cargo services,] in the outbound direction, the transportation beyond such point is a continuation of the transportation from the territory of the Party that has designated the airline and, in the inbound direction, the transportation to the territory of the Party that has designated the airline is a continuation of the transportation from beyond such point.

ANNEX II

Charter Air Transportation

Section 1

A. Airlines of each Party designated under this Annex shall, in accordance with the terms of their designation, have the right to carry international charter traffic of passengers (and their accompanying baggage) and/or cargo (including, but not limited to, freight forwarder, split, and combination (passenger/cargo) charters):

1. Between any point or points in the territory of the Party that has designated the airline and any point or points in the territory of the other Party; and

2. Between any point or points in the territory of the other Party and any point or points in a third country or countries, provided that, [except with respect to cargo charters,] such service constitutes part of a continuous operation, with or without a change of aircraft, that includes service to the homeland for the purpose of carrying local traffic between the homeland and the territory of the other Party.

B. In the performance of services covered by this Annex, airlines of each Party designated under this Annex shall also have the right: (1) to make stopovers at any points whether within or outside of the territory of either Party; (2) to carry transit traffic through the other Party's territory; (3) to combine on the same aircraft traffic originating in one Party's territory, traffic originating in the other Party's territory, and traffic originating in third countries; and (4) to perform international air transportation without any limitation as to change, at any point on the route, in type or number of aircraft operated; provided that, [except with respect to cargo charters,] in the outbound direction, the transportation beyond such point is a continuation of the

transportation from the territory of the Party that has designated the airline and in the inbound direction, the transportation to the territory of the Party that has designated the airline is a continuation of the transportation from beyond such point.

C. Each Party shall extend favorable consideration to applications by airlines of the other Party to carry traffic not covered by this Annex on the basis of comity and reciprocity.

Section 2

A. Any airline designated by either Party performing international charter air transportation originating in the territory of either Party, whether on a one-way or round-trip basis, shall have the option of complying with the charter laws, regulations, and rules either of its homeland or of the other Party. If a Party applies different rules, regulations, terms, conditions, or limitations to one or more of its airlines, or to airlines of different countries, each designated airline shall be subject to the least restrictive of such criteria.

B. However, nothing contained in the above paragraph shall limit the rights of either Party to require airlines designated under this Annex by either Party to adhere to requirements relating to the protection of passenger funds and passenger cancellation and refund rights.

Section 3

Except with respect to the consumer protection rules referred to in the preceding paragraph, neither Party shall require an airline designated under this Annex by the other Party, in respect of the carriage of traffic from the territory of that other Party or of a third country on a one-way or round-trip basis, to submit more than a declaration of conformity with the applicable laws, regulations and rules referred to under section 2 of this Annex or of a waiver of these laws, regulations, or rules granted by the applicable aeronautical authorities.

ANNEX III

Principles of Non-Discrimination Within and Competition among Computer Reservations Systems

Recognizing that Article 11 (Fair Competition) of this Agreement guarantees the airlines of both Parties "a fair and equal opportunity to compete,"

Considering that one of the most important aspects of the ability of an airline to compete is its ability to inform the public of its services in a fair and impartial manner, and that, therefore, the quality of information about airline services available to travel agents who directly distribute such information to the traveling public and the ability of an airline to offer those agents competitive computer reservations systems (CRSs) represent the foundation for an airline's competitive opportunities, and

Considering that it is equally necessary to ensure that the interests of the consumers of air transport products are protected from any misuse of such information and its misleading presentation and that airlines and travel agents have access to effectively competitive computer reservations systems:

1. The Parties agree that CRSs will have integrated primary displays for which:

a. Information regarding international air services, including the construction of connections on those services, shall be edited and displayed based on non-discriminatory and objective criteria that are not influenced, directly or indirectly, by airline or market identity. Such criteria shall apply uniformly to all participating airlines.

b. CRS data bases shall be as comprehensive as possible.

c. CRS vendors shall not delete information submitted by participating airlines; such information shall be accurate and transparent; for example, code-shared and change-of-gauge flights and flights with stops should be clearly identified as having those characteristics.

d. All CRSs that are available to travel agents who directly distribute information about airline services to the traveling public in either Party's territory shall not only be obligated to, but shall also be entitled to, operate in conformance with the CRS rules that apply in the territory where the CRS is being operated.

e. Travel agents shall be allowed to use any of the secondary displays available through the CRS so long as the travel agent makes a specific request for that display.

2. A Party shall require that each CRS vendor operating in its territory allow all airlines willing to pay any applicable non-discriminatory fee to participate in its CRS. A Party shall require that all distribution facilities that a system vendor provides shall be offered on a non-discriminatory basis to participating airlines. A Party shall require that CRS vendors display, on a non-discriminatory, objective, carrier-neutral and market-neutral basis, the international air services of participating airlines in all markets in which they wish to sell those services. Upon request, a CRS vendor shall disclose details of its data base update and storage procedures, its criteria for editing and ranking information, the weight given to such criteria, and the criteria used for selection of connect points and inclusion of connecting flights.

3. CRS vendors operating in the territory of one Party shall be entitled to bring in, maintain, and make freely available their CRSs to travel agencies or travel companies whose principal business is the distribution of travel-related products in the territory of the other Party if the CRS complies with these principles.

4. Neither Party shall, in its territory, impose or permit to be imposed on the CRS vendors of the other Party more stringent requirements with respect to access to and use of communication facilities, selection and use of technical CRS hardware and software, and the technical installation of CRS hardware, than those imposed on its own CRS vendors.

5. Neither Party shall, in its territory, impose or permit to be imposed on the CRS vendors of the other Party more restrictive requirements with respect to CRS displays (including edit and display parameters), operation, or sale than those imposed on its own CRS vendors.

6. CRSs in use in the territory of one Party that comply with these principles and other relevant non-discriminatory regulatory, technical, and security standards shall be entitled to effective and unimpaired access in the territory of the other Party. One aspect of this is that a designated airline shall participate in such a system as fully in its homeland territory as it does in any system offered to travel agents in the territory of the other Party. Owners/operators of CRSs of one Party shall have the same opportunity to own/operate CRSs that conform to these principles within the territory of the other Party as do owners/operators of that Party. Each Party shall ensure that its airlines and its CRS vendors do not discriminate against travel agents in their homeland territory because of their use or possession of a CRS also operated in the territory of the other Party.